AD-A134 359 WATER CONTROL DATA SYSTEM SOFTWARE MANUAL(U) CORPS OF ENGINEERS DALLAS TX SOUTHWESTERN DIV FEB 83 1/3

UNCLASSIFIED F/G 13/2 NL

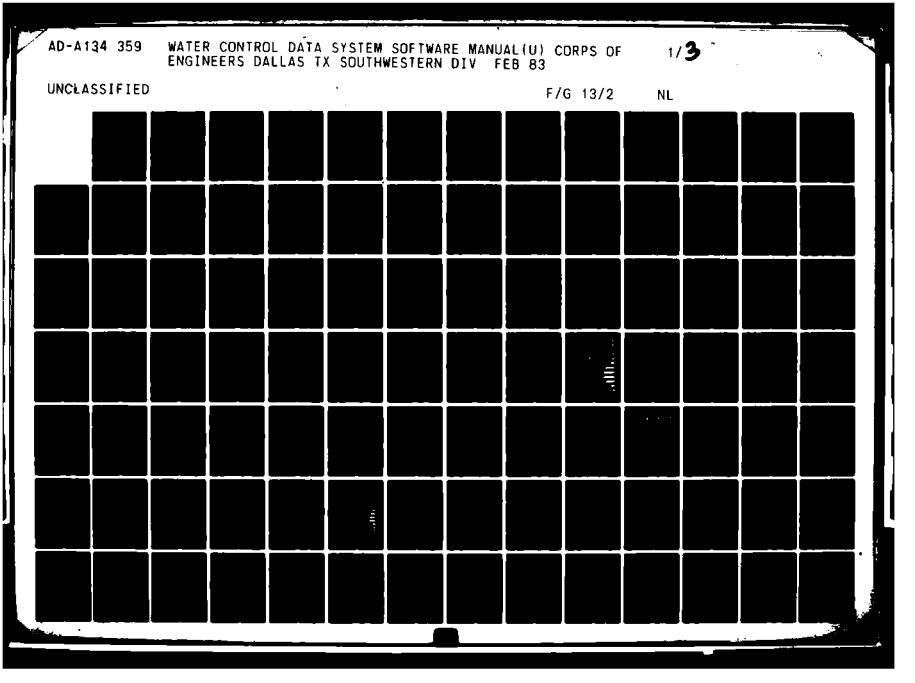

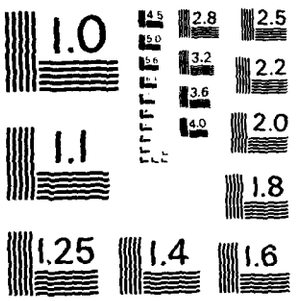

MICROCOPY RESOLUTION TEST CHART
NATIONAL BUREAU OF STANDARDS-1963-A

AD-A134359

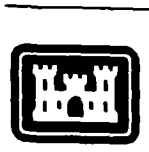

US Army Corps
of Engineers
Southwestern Division

Water Control Data System Software Manual

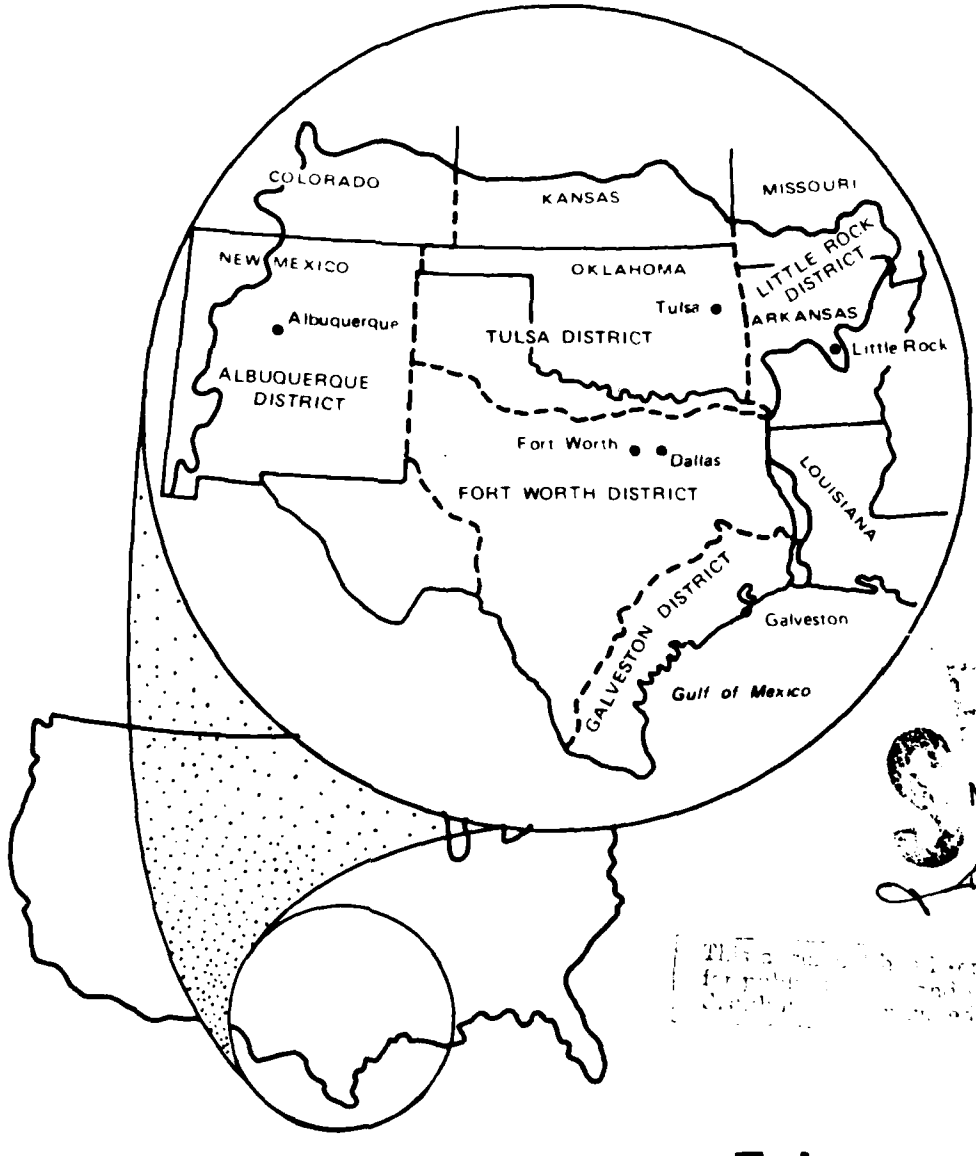

DTIC FILE COPY

DTIC
ELECTE
NOV 4 1983
A

February 1983

83 11 03 003

Unclassified

SECURITY CLASSIFICATION OF THIS PAGE (When Data Entered)

REPORT DOCUMENTATION PAGE		READ INSTRUCTIONS BEFORE COMPLETING FORM
1. REPORT NUMBER	2. GOVT ACCESSION NO. AD-A134359	3. RECIPIENT'S CATALOG NUMBER
4. TITLE (and Subtitle) WATER CONTROL DATA SYSTEM SOFTWARE MANUAL		5. TYPE OF REPORT & PERIOD COVERED Final
		6. PERFORMING ORG. REPORT NUMBER
7. AUTHOR(s) U.S. Army Corps of Engineers, Southwestern Division		8. CONTRACT OR GRANT NUMBER(s)
9. PERFORMING ORGANIZATION NAME AND ADDRESS U.S. Army Corps of Engineers, SWDED-WR Southwestern Division 1114 Commerce Street Dallas, tX 75242		10. PROGRAM ELEMENT, PROJECT, TASK AREA & WORK UNIT NUMBERS
11. CONTROLLING OFFICE NAME AND ADDRESS Office, Chief of Engineers Washington, D.C. 20314		12. REPORT DATE February 1983
		13. NUMBER OF PAGES
14. MONITORING AGENCY NAME & ADDRESS(if different from Controlling Office)		15. SECURITY CLASS. (of this report) Unclassified
		15a. DECLASSIFICATION/DOWNGRADING SCHEDULE

16. DISTRIBUTION STATEMENT (of this Report)

Distribution unlimited

17. DISTRIBUTION STATEMENT (of the abstract entered in Block 20, if different from Report)

18. SUPPLEMENTARY NOTES

Available from: Defense Technical Information Center, ATTN: DTIC/DDA-2, Bldg #5, Cameron Station, Alexandria, VA 22814

19. KEY WORDS (Continue on reverse side if necessary and identify by block number)

Water control
Data collection

20. ABSTRACT (Continue on reverse side if necessary and identify by block number)

This report describes the Southwestern Division, Corps of Engineers Water Control Data Collection and Analysis requirements and presents an overall system of software to satisfy those requirements of the water control manager. There is a brief summary of data collection, analysis, distribution and data exchange requirements in SWD. The hardware comprising the SWD data collection and transmission system is briefly described. The primary method of transmitting information from remote gage sites is via the Geostationary Orbiting Enviornmental Satellite (GOES) System. Processing of the data is done by a network of minicomputers located at

DD FORM 1 JAN 73 1473 EDITION OF 1 NOV 65 IS OBSOLETE

Unclassified

SECURITY CLASSIFICATION OF THIS PAGE (When Data Entered)

20. (Cont'd)
three (3) district offices and the division office.

The manual details the water manager user requirements as to the products needed. The software system consisting of acquisition group, data base, analysis group and data base utility group. Also interfacing with these groups is system support software required to provide a "user friendly" system. Within each major group are various programs and routines which interact to form the system. This system is designed to perform in an interactive mode.

SWD WATER CONTROL DATA SYSTEM
SOFTWARE DESIGN MANUAL

TABLE OF CONTENTS

Paragraph No.		Page
	I. INTRODUCTION	
1.1	Purpose	1-1
1.2	Relation to WCDS Master Plan	1-1
1.3	Purpose of the WCDS	1-1
	II. SWD WATER CONTROL MANAGEMENT	
2.1	Geographical Area	2-1
	2.1.1 General	2-1
	2.1.2 Topography	2-1
	2.1.3 Climate	2-1
2.2	Water Control Projects	2-2
2.3	Water Control Management Responsibilities	2-2
	2.3.1 Division Office - Reservoir Control Center (RCC)	2-2
	2.3.2 District Office Reservoir Control Sections	2-3
	III. SWD DATA COLLECTION & ANALYSIS REQUIREMENTS	
3.1	General	3-1
	3.1.1 Hydrologic-Hydraulic Data	3-1
	3.1.2 Meteorologic Data	3-1
	3.1.3 Water Quality Data	3-2
	3.1.4 Other Data	3-2
3.2	Data Exchange	3-2
	3.2.1 Other Federal Agencies	3-3
	3.2.2 State and Local Agencies	3-3
3.3	Data Processing and Analysis	3-3
	3.3.1 Reports	3-4
	3.3.2 Briefing	3-4
	IV. SWD WATER CONTROL DATA SYSTEM	
4.1	General	4-1
4.2	Field Data Collection	4-1
	4.2.1 Type of Data Collected	4-1
	4.2.2 Manual and Semi-Automated Methods	4-2
	4.2.3 Automated Methods	4-2
4.3	System Hardware	4-3
	4.3.1 Computer Configuration	4-3

A1

DTIC COPY INSPECTED

Paragraph No.		Page
4.3.2	Display Equipment	4-4
4.3.3	Emergency Message Equipment	4-4
4.4	Operating System Software	4-4

V. WCDS USER REQUIREMENTS

5.1	General	5-1
5.2	An Overview of User Requirements	5-1
5.3	Water Control Products	5-2
5.3.1	Data Displays	5-2
5.3.1.1	Single Parameter - Single Site	5-3
5.3.1.2	Multiple Parameters - Single Site	5-3
5.3.1.3	Single Parameter - Single Site - Time Series	5-3
5.3.1.4	Multiple Parameter - Single Site-Time Series	5-3
5.3.1.5	Multiple Parameter - Multiple Site - Time Series	5-3
5.3.1.6	Multiple Parameter - Watershed - Time Series	5-4
5.3.2	Graphics Displays	5-4
5.3.2.1	Data Point Plots	5-4
5.3.2.2	Average Data Plots	5-4
5.3.2.3	Hydrograph Plots	5-4
5.3.2.4	Map Plots 1	5-4
5.3.2.5	Map Plots 2	5-5
5.3.3	Data Analysis and Forecasts	5-5
5.3.3.1	Basin-Watershed Rainfall-Runoff and API's	5-5
5.3.3.2	Streamflow Forecasts	5-6
5.3.3.3	Reservoir Inflow and Operational Forecasts	5-6
5.3.3.4	Long-Range River Forecasts	5-6
5.3.3.5	Long-Range Reservoir Forecasts	5-7
5.3.3.6	Hydropower Allocation Report	5-7
5.3.3.7	Navigation Taper	5-7
5.3.3.8	Long-Range Forecasts - Reservoir Systems	5-8
5.3.4	Reports	5-8
5.3.4.1	Regularly Recurring Reports	5-8
5.3.4.1.1	Morning Lake (Project) Report	5-8
5.3.4.1.2	Morning River Report	5-9
5.3.4.1.3	Daily Generation Report	5-9
5.3.4.1.4	Monthly Lake Report	5-9
5.3.4.1.5	Monthly River Report	5-9
5.3.4.1.6	Monthly Hydropower Reports	5-9
5.3.4.1.7	Annual Lake Report	5-10
5.3.4.1.8	Annual River Report	5-10
5.3.4.1.9	Other Annual Report Products	5-10
5.3.4.2	As Required Reports	5-10
5.3.4.2.1	Flood Conditions Report	5-11
5.3.4.2.2	Water Supply Accounting	5-11
5.3.4.3	User Selectable Format Reports	5-11
5.3.5	Daily Regulation Products	5-11

Paragraph No.		Page
	5.3.5.1 Daily Water Budget	5-12
	5.3.5.2 Polling Report	5-12
	5.3.5.3 Daily 3-5 Day Project Inflows	5-12
	5.3.5.4 Hydropower Project Inflow Forecasts	5-12
	5.3.5.5 Power Scheduling, Daily	5-13
	5.3.5.6 Power Scheduling, Hourly	5-13
5.4	Support Requirements	5-13
	5.4.1 Applications Executive	5-13
	5.4.2 Systems Status Monitor	5-13
	5.4.3 Access Monitor	5-13
	5.4.4 Information System	5-13
	5.4.5 Training System	5-13
	5.4.6 Auto-Alert	5-13
	5.4.7 Task Monitoring System	5-13
	5.4.8 Simulation and Training	5-13
	5.4.9 Remote Conferencing	5-14
	5.4.10 Message Preparation and Exchange	5-14
	5.4.11 Automatic Reconfiguration	5-14
	5.4.12 Archiving	5-14
	5.4.13 Data Entry	5-14
	5.4.14 Data Screening	5-14
	5.4.15 Data Transfer	5-14
	5.4.16 Auto-Dial	5-14
5.5	Special Requirements	5-15
	5.5.1 Albuquerque	5-15
	5.5.1.1 Map Overlay	5-15
	5.5.1.2 Basin Diagram	5-15
	5.5.2 Fort Worth	5-15
	5.5.2.1 Texas Water Commission	5-15
	5.5.2.2 Water Diversion (U.S.G.S.)	5-15
	5.5.2.3 Dallas Water Utilities	5-15
	5.5.3 Galveston	5-15
	5.5.3.1 Coastal Tides Map	5-15
	5.5.3.2 Navigation Channel Forecast	5-15
	5.5.3.3 Tide Forecast	5-15
	5.5.4 Little Rock	5-15
	5.5.5 Tulsa	5-15
	5.5.5.1 Holdouts	5-15
	5.5.5.2 Taper	5-15
	5.5.5.3 Flood Benefits	5-15
	5.5.6 SWDO	5-16
	5.5.6.1 Lakes in Flood Pool	5-16
	5.5.6.2 River Stations Above Floodstage	5-16

VI. SOFTWARE DEVELOPMENT TO SUPPORT USER REQUIREMENTS

6.1	General	6-1
	6.1.1 Applications Software	6-1

Paragraph No.		Page
6.1.2	Support Software	6-1
6.1.3	Common Software	6-2
6.2	Applications Software	6-2
6.2.1	Acquisition Group (A)	6-2
6.2.1.1	GOES Communications Program (A1)	6-3
6.2.1.2	NWS Communications Program (A2)	6-4
6.2.1.3	Land Line Communications Program (A-3)	6-5
6.2.1.4	Manual Data Entry Program (A4)	6-5
6.2.1.5	Inter-computer Data Link (A5)	6-6
6.2.1.6	Satellite Imagery Communications (A6)	6-6
6.2.1.7	Radar Imagery Communications (A7)	6-6
6.2.1.8	Data Conversion and Screening Program (A8)	6-6
6.2.1.9	Site File Utility (A10)	6-7
6.2.1.10	Emergency Alert Program (A11)	6-7
6.2.1.11	Data Entry Log (A12)	6-8
6.2.2	Data Base Utility Group (B)	6-8
6.2.2.1	Report Generator (B1)	6-8
6.2.2.2	Database Utility Program (B3)	6-9
6.2.2.3	Display and Graphical Edit Program (B4)	6-9
6.2.2.4	Mathpack Program (B5)	6-11
6.2.2.5	Data Network Link (B6)	6-12
6.2.3	Analysis Group (C)	6-13
6.2.3.1	Data Analysis Program (C1)	6-15
6.2.3.2	Streamflow Forecast Model (C2) and Pre-Processor	6-16
6.2.3.3	Operations Model (C3) and Pre-Processor (C8)	6-17
6.2.3.4	Economic Analysis Program (C4)	6-19
6.2.3.5	Extended Analysis (C5)	6-20
6.3	Support Software	6-21
6.3.1	Control Routines (R)	6-22
6.3.1.1	Master Control Program (R1)	6-22
6.3.1.2	Interactive Input Control System (R2)	6-23
6.3.1.3	Interactive Executive Control Program (R3)	6-25
6.3.1.4	Inter-Computer Job Control (R4)	6-26
6.3.2	Database Routines	6-27
6.3.2.1	Database Library Routines (D5)	6-27
6.3.2.2	Database Entry Program (D3)	6-27
6.3.2.3	Internal Database Transfer (D6)	6-28
6.3.3	Records Routines	6-28
6.3.3.1	Program Execution Log Entry (L1)	6-28
6.3.3.2	Program Execution Analysis (L2)	6-28
6.3.3.3	Operations Log (L3)	6-29
6.3.3.4	Interactive Session Log (L4)	6-29
6.3.4	Communications Routines (S)	6-29
6.3.4.1	Messages (S1)	6-29
6.3.4.2	Bulletin Boards (S2)	6-30
6.3.4.3	Documentation (S3)	6-30
6.3.4.4	Remote Conferencing System (S4)	6-31
6.3.4.5	Inter-Computer Communications (S5)	6-31

Paragraph No. — Page

6.3.5 Training Aids 6-32
6.3.5.1 Documentation 6-32
6.3.5.2 Interactive Features 6-32
6.3.5.3 Simulation 6-33
6.4 Interactions Between Individual Programs 6-33
6.4.1 Communications 6-33
6.4.2 Control 6-34
6.4.2.1 Initiation and Sequencing 6-35
6.4.2.2 Processing Priorities 6-35
6.5 Relationships Among Software Components and Requirements 6-36
6.6 Known Availability of Software Components 6-37

VII. TECHNICAL REQUIREMENTS

7.1 General 7-1
7.1.1 Purpose 7-1
7.1.2 Scope 7-1
7.2 General Standards and Conventions 7-1
7.2.1 Need for Standards and Conventions 7-1
7.2.2 The Design Process 7-1
7.2.3 Hierarchical Top-Down Program Design 7-2
7.3 Design Standards and Conventions 7-2
7.3.1 Purpose 7-2
7.3.2 Statement of Requirements 7-2
7.3.2.1 Introduction 7-2
7.3.2.2 Purpose of Program 7-3
7.3.2.3 Capability Requirements 7-3
7.3.2.3.1 Methodology 7-4
7.3.2.3.2 Assumptions and Limitations 7-4
7.3.2.3.3 Verification 7-4
7.3.2.3.4 Interface Requirements 7-4
7.3.2.3.5 Input/Output 7-4
7.3.2.3.6 System Requirements 7-5
7.3.2.3.7 Programing Requirements 7-5
7.3.3 Program Design 7-5
7.3.4 General or Functional Design Phase 7-6
7.3.4.1 Description 7-6
7.3.4.2 Top-Down Design 7-6
7.3.4.3 Specifications 7-7
7.3.5 Detailed Design Phase 7-7
7.3.5.1 Scope of Detail Design 7-7
7.3.5.2 Detail Design Method 7-8
7.3.5.3 Modularity 7-8

Paragraph No.		Page
7.4	Code Development	7-9
7.4.1	Allowable Programing Languages	7-9
7.4.2	Programing Conventions and Standards	7-10
7.4.2.1	Programs	7-10
7.4.2.2	Subprograms	7-11
7.4.2.3	Subprogram and Variable Names	7-13
7.4.2.4	Style	7-13
7.4.2.5	Input/Output (I/O)	7-14
7.4.2.6	Alphanumeric Data	7-15
7.4.2.7	Control Structure	7-16
7.4.2.8	Debugging/Error Messages	7-16
7.4.2.9	Specifications Statements	7-16
7.5	Program Testing	7-17
7.5.1	Test Plan	7-17
7.5.2	Individual Module Testing	7-17
7.5.3	Composite Program Testing	7-17
7.5.4	Standard Test Data	7-17
7.6	Documentation	7-17
7.6.1	General	7-17
7.6.2	Development Documentation	7-18
7.6.3	User Manual	7-18
7.6.4	Programer Manual	7-19
7.7	Program Maintenance	7-19
7.7.1	Program Library	7-19
7.7.2	Change Orders and Error Reports	7-19
7.7.3	Program Modification	7-20
7.8	Review Process	7-20
7.8.1	General	7-20
7.8.2	Small Project Review Procedures	7-21
7.8.3	Preliminary Design Review	7-21
7.8.3.1	General	7-21
7.8.3.2	Review Information	7-22
7.8.3.3	Review Process	7-22
7.8.4	Detailed Design Review	7-22
7.8.4.1	General	7-22
7.8.4.2	Review Information	7-22
7.8.4.3	Review Process	7-23
7.8.5	Code Development Peer Review	7-23
7.8.6	Final Review	7-24
7.8.6.1	General	7-24
7.8.6.2	Information Presented	7-24
7.8.6.3	Review Process	7-24

Paragraph No.		Page
	VIII. SCHEDULE AND FUNDING	
8.1	General	8-1
8.2	Management	8-1
8.2.1	System Management	8-1
8.2.2	Software or Program Module Management	8-1
8.3	Schedule	8-2
8.3.1	General	8-2
8.3.2	Priority 1	8-2
8.3.3	Priority 2	8-2
8.3.4	Priority 3	8-3
8.3.5	Priority 4	8-3
8.3.6	Priority 5	8-3
8.3.7	Priority 6	8-3
8.3.8	Support Software	8-3
8.4	Summary of Resource Requirements	8-7
	IX. GLOSSARY	9-1

TABLES

No.	Title	Page
4-1	Computer Hardware List	4-3
8-1	System Development Cost and Priorities	8-7
8-2	Cost Summary	

FIGURES

No.	Title
5-1	Water Control Menu
5-2	Water Control Menu
5-3	Example - Display Single Site, Last Available Data
5-4	Example - Display Single Site, Time Series Data
5-5	Example - Display Multiple Parameters - Single Site, Time Series Data
5-6	Example - Multiple Parameters - Multiple Sites - Time Series Data
5-7	Example - Multiple Parameter - Watershed - Time Series Data
5-8	Data Point Plot
5-9	Average Data Plot
5-10	Hydrograph Plot
5-11	Map Plot - Type 1
5-12	Map Plot - Type 2
5-13	API Display
5-14	Streamflow Forecasts
5-15	Reservoir Inflow Forecast
5-16	Hydropower Allocation
5-17	Van Buren Guide Curve
5-18	Example Daily Lake Report
5-19	Reservoir Report - Little Rock District
5-20	Reservoir Report - Fort Worth District
5-21	River Report
5-22	Energy Declaration & Generation
5-23	Monthly Reservoir Report - Tabular
5-24	Monthly Lake Report - Graphical
5-25	Monthly River Report
5-26	Monthly Hydropower Report
5-28	Annual Lake Report - Tabulation
5-29	Annual Lake Report - Graph
5-30	Annual River Report - USGS Format
5-31	Status of Water Control Manuals
5-32	Annual Hydropower Production
5-33	Annual River Flow - Graph
5-34	Flood Report
5-35	Flood Report
5-36	Example - Water Supply Accounting
5-37	Hydropower Project Inflow Forecast
5-38	Basin-Line Sketch
5-39	Texas Water Commission Report
5-40	Water Diversion
5-41	Water Supply Report
5-42	Navigation Taper
6-1	Overview - Water Control Data System Applications Software

Figure No.	Title
6-2	Overview - Water Control Data System Support Software
6-3	Water Control Program Schematic
6-4	Interactive Input Control System Schematic
6-5	Typical Interactive Control Hierarchy
6-6	Processing Priorities
6-7	Requirements Software Matrix
6-8	Data Flow Diagram
6-9	Software Availability Table
7-1	Sample Statement of Requirements
7-2	Organization - Top Down Program
7-3	Expanded Cost Evaluation Component
7-4	Waiver Request Form
7-5	Sample Subroutine
7-6	Fortran Statements
7-7	Review Scheduling Form
7-8	Review Recording Form
8-1	Software Development Schedule, Priority 1
8-2	Software Development Schedule, Priority 2
8-3	Software Development Schedule, Priority 3
8-4	Software Development Schedule, Priority 4
8-5	Software Development Schedule, Priority 5
8-6	Software Development Schedule, Priority 6
8-7	Support Software

I. INTRODUCTION

1.1 Purpose. The primary purpose of this Software Design Manual is to provide an organized plan for the development of software for the Southwestern Division (SWD) Water Contro Data System (WCDS). It will:

a. Present water managers (users) requirements for the WCDS.

b. Identify the software necessary to satisfy the user requirements for water management.

c. Act as guidance for detailed software design methods.

d. Provide a schedule and management tool for software development.

1.2 Relation to WCDS Master Plan. The SWD WCDS Master Plan, approved in 1979, detailed system performance requirements, described and evaluated alternative approaches to meet those requirements and recommended a system plan. The system plan included computer hardware, peripheral hardware (disc & tape drives, printers, terminals communications hardware), software and compilers, remote gaging station telemetry via satellite and communications system interface. The Software Design Manual is an extension of the SWD WCDS Master Plan to provide for an orderly development of user software for the system.

1.3 Purpose of the WCDS. The SWD WCDS is comprised of all of the equipment within the division used to acquire, process, display and distribute information for real-time project regulation and associated interagency coordination. Its purpose is to provide a cost effective means of collecting, distributing, analyzing and displaying data required by the water managers for day-to-day regulation of more than 110 Corps and Section 7 reservoirs within SWD.

II. SWD WATER CONTROL MANAGEMENT

2.1 Geographical Area.

2.1.1 General. The SWD Corps of Engineers geographical area of responsibility covers 557,000 square miles which includes all of Oklahoma, all of Texas, all of New Mexico east of the Continental Divide, and parts of Arkansas, Missouri, Colorado, Kansas and Louisiana. The division is divided into five districts: Albuquerque, Fort Worth, Galveston, Little Rock and Tulsa. The area encompassed contains widely diverse geographical and climatic conditions. This diversity presents a broad range of water management problems requiring a water control data collection and management system which has the flexibility to adapt to the various district differences and also fulfill the requirements of a divisionwide system.

2.1.2 Topography. The western portion of the division is bounded by the Continental Divide in the rugged Rocky Mountains of Colorado and New Mexico. Streams flow through deep gorges and narrow valleys enroute to the Great Plains to the east or large central valleys to the south. The northern portion is bounded by the plains area and the Ozark highlands. The plains are rolling prairies with rich farmlands and pasture while the Ozark highlands are rugged and largely forested. On the east is the Grand Prairie, the Mississippi alluvial valley and the rolling piney woods area along the Texas/Louisiana border. The southern boundary is the Gulf Coast with relatively flat coastal plains, then along the Rio Grande from the fertile lower valley to the rugged Big Bend country. The interior areas of the division vary from the rugged Sangre de Cristo Mountains, to the gently rolling plains of north-central Texas. Streams vary from steep, narrow channels with rapid runoff to flat streams with sluggish flows and shifting channels.

2.1.3 Climate. The climate varies from humid, almost subtropic in the east and southeast portion of the division, to semiarid in the western portion. The great variation in topography from 14,000 feet near the Continental Divide, to sea level along the Gulf Coast contribute to climatological variations. Temperature extremes of -50 degrees to over 120 degrees have occurred. The normal daily maximum temperature for January in the headwater areas of the Arkansas and Rio Grande in Colorado is about 10 degrees while average daily minimums are below zero. Along the Gulf Coast in January the normal average daily maximum temperature is about 70 degrees with minimum averaging about 50 degrees. July temperature variation is not as pronounced with normal daily maximum temperatures near 80 degrees in the mountains to near 95 degrees in the central plains and minimum temperatures from 40 degrees to 75 degrees. Annual average precipitation also varies widely. Portions of the high plains of eastern Colorado receive less than 8 inches annually while the hills of western Arkansas average over 56 inches annually. Rainfall over the plains is uneven and is often insufficient

purposes. The Gulf Coast is occasionally subjected to tropical storms or hurricanes with rainfall from these storms extending well into the interior areas. The western portion of the division has average snowfall ranging from 21 inches across the plains to 150 inches in the mountains.

2.2 Water Control Projects. Corps of Engineers involvement in water resources development started in SWD with the construction of Conchas Reservoir (Albuquerque District) which was completed in 1939. Since that time the Corps has completed 77 multipurpose reservoirs and 12 navigation locks and dams. Storage projects range in capacity from about 25,000 acre-feet to 5.4 million acre-feet. There are five additional Corps reservoirs and one section 7 project under construction which are scheduled to be placed in operation by 1983. The Corps is also charged with the regulation of the flood control storage in 13 reservoirs constructed by other agencies using Federal funds (Section 7 projects). In addition to the reservoirs, SWD has constructed over 50 local protection projects including floodways, levees, pump stations, hurricane wave and surge protection, the Intercoastal Waterway, and harbor and deep water channel projects.

2.3 Water Control Management Responsibilities. The water control management responsibilities of the division and district water control managers have been prescribed in several regulations. These are cited for reference as follows:

a. ER 10-1-3, *ORGANIZATION AND FUNCTIONS, Divisions and Districts.*

b. ER 1110-2-1400, Reservoir Control Centers.

c. ER 1110-2-240, Water Control Management.

d. EM 1110-2-3600, Reservoir Regulation.

e. SWDR 10-1-1, Organization and Functions, Southwestern Division Office (SWDO) and districts.

f. District regulations of functional statements (see the appropriate district regulation 10-1-1 or 10-1-3).

g. SWD RCC Guidance Memorandum.

2.3.1 Division Office - Reservoir Control Center (RCC). The RCC in the division office is responsible (SWDR 10-1-1) for the overall management of the water control activities within SWD. This requires collecting and analyzing sufficient data on a day-to-day basis to stay abreast of activities within the division and be in a position to coordinate water control activities between districts, other divisions and agencies.

2.3.2 District Office Reservoir Control Sections. Within SWD each of the five districts have been delegated the basic responsibility for prescribing the water control activities at projects located within the district boundary, this includes the collection, reporting, analysis and display of data necessary for day-to-day water control activities. It also requires the exchange of water management data with other Federal, State, and local agencies who have an interest in the use of waters stored or released from the Corps of Engineers projects. In districts where the streams cross the district boundary, the regulation in the adjacent district has to be coordinated. The district functions vary to some degree, depending on the number and type of projects located in the district, geographical area, climate and other conditions. The requirement to support the district and division functions are detailed in Chapter V.

III. SWD DATA COLLECTION & ANALYSIS REQUIREMENTS

3.1 General. The SWD Water Control Managers require collection and analysis of a wide variety of real-time environmental and operational data from about 570 field sites throughout the division. These data fall under several categories which are described in the following paragraphs.

3.1.1 Hydrologic-Hydraulic Data. This category includes all data which indicate the status of stored and flowing water at various lakes and stream locations throughout SWD. These data are generally the most important in making water control decisions and have the highest data collection priority. The frequency at which these data are required varies from one report a day to once every hour, depending on conditions at the site. Hydrographs on the small streams which affect projects in the western and southern portion of SWD peak in 4-12 hours. Types of data included in this category are:

a. Stream Stage. Normally, a minimum of one reading per day is required. This requirement can increase to several readings per day during storm runoff periods.

b. Project Data. The following types of data indicate project conditions and are used to determine rate of water inflow and release. The frequency of these reports depend on the activity at the project.

(1) Headwater State. Required hourly during severe runoff events. Normally 4- or 8-hour readings.

(2) Tailwater Stage. Depends on frequency of release changes.

(3) Tainter Gate Opening. May be as frequent as every 15 minutes; 3-4 per day on average.

(4) Sluice Gate Opening. Same as tainter gates.

(5) Valve Opening. Same as tainter gates.

(6) Turbine Flow. Depends on power demands. SWD projects are used for peaking.

(7) Lockage Volume. Daily.

c. Marine Data (Galveston District Only). These data include tide stage condition frequency increases to hourly.

d. Snow Data (Albuquerque District Only). These data may include snow depth, water content, and temperature. Requirement is seasonal.

3.1.2 Meteorologic Data. Meteorological data are used to forecast flows in the stream above water control structures (lakes). Timely receipt of these data can have a significant effect on real-time water control decisions.

One example of the importance of these data is the operation of Addicks and Barker projects located above the city of Houston. The plan of regulation calls for adjusting the outflow as soon as 1 inch of rain is reported downstream. This is a high risk area with rapid runoff rates from residential areas below the projects. Another example is the B. A. Steinhagen Lake where gate operations have to be initiated within a short time frame to respond to runoff from the local area above the project.

a. Precipitation. Daily or every 3 hours during a storm period.

b. Evaporation. Daily.

c. Wind Direction and Wind Speed. Daily.

d. Air Temperature. Daily.

e. Radar Maps or Reports. Hourly.

3.1.3 Water Quality Data. Water quality data are collected at those locations within SWD where water quality could be affected by SWD water control operations. This data category normally has a lower data collection priority than Hydrologic-Hydraulic or Meteorologic data during flood control or high water volume operations, but assumes a higher priority during low flow conditions. Water quality data are collected as required at both field data collection sites and by portable equipment located at sites determined by SWD water control personnel. Types of water quality data most frequently collected are as follows:

a. Water Temperature. Hourly when changing release rates to assure that discharge is meeting target temperature. After flows settle out frequency would reduce to about 4 hours.

b. Dissolved Oxygen. Same as water temperature.

3.1.4 Other Data

a. Hydroelectric power. The total daily power (megawatts) generated from each hydroelectric installation.

b. Piezometer readings. These data shall be monitored where required.

3.2 Data Exchange. Exchange of data is required between adjoining districts who have a common watershed or river basin. In order to meet the responsibilities described in Chapter II, it is also necessary for the districts to exchange data with the division. In addition to the data exchange requirements within SWD, data are exchanged with the Chief of Engineers office and the Lower Mississippi Valley Division (LMVD).

3.2.1 Other Federal Agencies.

a. National Weather Service. A large volume of data exchange takes place between the Corps of Engineers and National Weather Service (NWS). The types of data include precipitation, stream stages, lake evaluations and releases, stream forecasts, weather forecasts, storm warnings, hurricane forecasts, etc. It will be necessary for the Corps to interface with the NWS data system for data exchange. The current plans are for the interface to be with the S/140 computers at the NWS River Forecast Centers.

b. Southwestern Power Administration (SWPA). Manages the sale of hydroelectric power from the SWD hydroprojects.

c. Bureau of Reclamation. Corps of Engineers is responsible for prescribing the operation of flood control storage under Section 7 of 1944 Flood Control Act. Therefore, an exchange of project data is necessary.

d. US Geographical Survey (USGS). Streamflow measurements, observers, etc.

3.2.2 State and Local Agencies. There are several State River Authorities, water districts, and municipalities which have projects which affect the operation of Corps of Engineers projects. It is, therefore, necessary to maintain an exchange of data with these agencies.

3.3 Data Processing and Analysis. The data processing and analysis involves performing a number of calculations, conversions, tabulations, and graphical plottings to change the raw field data into a form suitable for water management decisionmaking. A few examples of data processing are shown below with detailed descriptions in Chapter V.

a. Converting stages to flow.

b. Computing inflow to the lakes.

c. Computing release rates and volumes.

d. Routing streamflow and releases to control points.

e. Forecasting inflow to the lakes.

f. Forecasting runoff from rainfall or snowmelt.

g. Computing required releases from a lake or system of lakes.

h. Hydropower generation allocation and actual.

i. Computing system release rates.

j. Water temperature of releases.

3.3.1 Reports. Much of the data collected, processed, and used for water control decisions end up in the form of reports. Several of the reports used in the districts and division (RCC) are listed as follows:

a. Daily Reports.

(1) Individual project operations (districts).

(2) Benefits from operations.

(3) Major water control system summaries.

(4) Narrative on significant events in district operation.

b. Annual Reports (districts, RCC). These reports are largely narrative in form. Significant events are summarized in text, graphical and tabular forms.

3.3.2 Briefing. Briefing of the following personnel on water control field conditions and operations:

a. Water Control Managers (districts, RCC).

b. Emergency Operations Personnel (districts).

c. COE Executives (districts, RCC).

d. Media personnel (districts, RCC) through Public Affairs Office.

e. Construction-Operations personnel (districts).

f. Office of Chief of Engineers (RCC).

IV. SWD WATER CONTROL DATA SYSTEM

4.1 General. The major components of the SWD WCDS consist of:

a. Remote gaging stations equipped with sensors and telemetry devices.

b. Communications equipment.

c. Data acquisition and processing equipment (ADPE) located at three district offices (Fort Worth, TX; Little Rock, AR; and Tulsa, OK and the division office (Dallas, TX).

d. Display and distribution devices.

The ADPE located at each site will have the capability to exchange data with another site in the system and software shall be transportable from site to site. The Albuquerque and Galveston Districts will remote from the Dallas computer.

4.2 Field Data Collection. The WCDS Master Plan provides for the primary method of field data collection to be via the Geostationary Orbiting Environmental Satellite (GOES) system. The system will also contain stations which collect and transmit data via telephone and line-of-site radio. The present plan includes 350-450 stations which will be equipped to automatically telemeter data to the district and/or division processors. There will also be a portion of the data (primarily from the project offices) which will be entered into the system via a microprocessor such as an Apple, or via a TTY terminal. A portion of the field data will be obtained through data exchange arrangements with other agencies. This will be accomplished via TTY type terminals and computer to computer communications. The frequency of data transmission will vary with the importance of the site. However, in general, the transmission frequency will range from 1 to 4 hours.

4.2.1 Type of Data Collected. The majority of the stations will be reporting one to two types of environmental data plus station equipment health data. There will be several types of data reported from the project sites. The data will include the following list of parameters although stream stage and precipitation will be the most prominent type.

a. Stream Stage

b. Precipitation

c. Battery Voltage

d. Lake Level

e. Evaporation

f. Water temperature

g. Air temperature (max, min, current)

h. Wind speed

i. Wind direction

j. Hydropower generation

k. Water withdrawal through metered lines

l. Gate openings & corresponding times

m. Snow depths

n. Snow water equivalents

4.2.2 Manual and Semi-Automated Methods. This will involve entering visual observations into the system by use of a TTY terminal or microprocessor. It is planned that these data could be entered into the system by the terminal operator or as an option stored on the terminal or microprocesser for retrieval upon interrogation by the district or division computer. This could be accomplished by the auto-calling capability of these computers.

4.2.3 Automated Methods.

a. Telephone. There are over 100 gages which are currently equipped with a DARDC which transmits information on interrogation via telephone. The output from the DARDC is standard asynchronous ASCII Code. These devices will be interrogated by the computer using an auto-calling unit.

b. Radio. The Little Rock District has a network of radio stations. This network is controlled by a NOVA 1200 minicomputer. This network currently outputs data to an ASR 33 teletype.

c. GOES. The remainder of the stations will be equipped with Data Collection Platform Radio Sets (DCPRS) which will transmit over the GOES system. Currently there are three types of DCPRS in the network. These are (1) LaBarage self-timed, (2) Handar 2-channel (one channel self-timed and one channel emergency threshold) and (3) Sutron adaptive random which transmits in both the self-timed and adaptive random mode. It is important to note that each of these platforms have a different data format. The data from the DCPRS will be retrieved through the GOES Data Collection System (DCS) located in the World Weather Building, Camp Springs, Maryland. The data will be transferred from the DCS at Camp Springs to the WCDS computers via dial-up telephone line. This is expected to be accomplished automatically, computer to computer, by use of the auto-calling capability of the WCDS computers. Transmission rates are to be at 4800 BAUD. A Corps wide study is currently being conducted to determine the feasibility of a network of Corps ground receive sites for the GOES. Depending on the results of this study the future retrieval of DCPRS transmissions may be through a Corps ground receive site.

4.3 System Hardware

4.3.1 Computer Configuration. The minicomputers used in the system are Harris. Each of the three district offices have a configuration consisting of a H-100 and H-500 minicomputer. The H-100 serves as the primary communication and data logging processor. The H-500 serves as the primary processing unit with the capability of assuming the communication and logging function in the event of failure of the H-100. The district systems and division machine are expected to operate as a network which will provide for data exchange and back-up capability. A brief summary of the equipment at each site is presented in Table 4-1.

TABLE 4-1
COMPUTER HARDWARE LIST

ITEM DESCRIPTION	SITE			
	FORT WORTH	LITTLE ROCK	TULSA	DALLAS
Harris 500 Computer with error correcting MOS memory & virtual memory	1	1	1	1
Scientific Arithmetic Unit (SAU)	1	1	1	1
Line Printer, 300 LPM	2	1	1	1
Disc Drive, 80M BYTE	1	1	-	1
Disc Drive, 300M BYTE	1	1	2	1
Magnetic Tape Unit, 9 track, 800/1600 BPI, 45 IPS (switchable to H-100)	1	1	1	1
Direct Memory Access Communications Processor (DMACP-16)	2	2	2	2
Harris 100 Computer with error correcting MOS memory & virtual memory	1	1	1	-
Disc Drive, 80M BYTE	1	1	1	-
DMACP-16	1	1	1	-
VADIC Auto-Call Unit	1	1	1	1

4.3.2 Display Equipment. The amount of display equipment at each site varies with the site work load. Generally, the types of equipment at each site will be (1) B/W CRT's (80 col. 24 line screens), (2) Color Graphic CRT's, (3) hard copy terminals, (4) graphic tablets, (5) flat bed graphic plotters, and (6) future large screen display. The color graphic CRT's are expected to be Tektronix compatible.

4.3.3 Emergency Message Equipment. As the system becomes fully functional, voice synthesizers will be added in connection with the auto-call to provide messages for the duty person.

4.4 Operating System Software. The Harris operating system software being used on the computers is "VOS." The other system software packages available on the system computers are:

a. SORT/MERGE

b. FORTRAN 77

c. TOTAL II Data Base Management System

d. AZ7 QUERY LANGUAGE with Report Writer

e. AZ7/TOTAL INTERFACE

f. Remote Job Entry to CDC 200UT EMULATION

g. Remote Job Entry to IBM 2780 EMULATION

h. Remote Job Entry IBM 2780 Host

i. Remote Job Entry to IBM HASP II M/L WORK STATION EMULATION

j. Remote Job Entry to IBM HASP II M/L WORK STATION HOST

k. VADIC AUTO DIAL Software

V. WCDS USER REQUIREMENTS

5.1 General.

This chapter details user requirements for the system and is not intended to be a listing of software necessary to produce these products. Chapter VI, "Software Development to Support User Requirements," presents the individual software items/programs to produce the user product requirements shown in this chapter. In order to simplify discussions of user requirements this chapter is divided into four major divisions: 5.2 An Overview of User Requirements; 5.3 Water Control Products; 5.4 Support Requirements; and 5.5 Special Requirements.

The SWD Water Control Data System (WCDS) will be a "user friendly" system allowing persons of various technical backgrounds (hydrologic, hydraulic, water control and ADP) to access the system and produce a multitude of products. The system will be structured so that the complexity of individual software items is imperceptible to most users. Many of the data display products will be menu driven, guiding the user through the display system to the specific product desired. Others may be accessed as a "real-time" program, active on specific terminals at any time. Some products will require extensive user intervention and a working knowledge of the specific task being undertaken and of the software being used.

5.2 An Overview of User Requirements. Water management activities require acquisition, display, interpretation, and transmission of significant volumes of hydro-meterologic and project data daily. Most Water Management units are staffed to handle this data during typical low flow situations, producing daily reports of project operation (reservoir regulation) activities and general hydrologic conditions in a real-time manner. Flood periods stress most units to the utmost. Data volumes increase significantly requiring additional time to transfer data from projects, stream gages and rainfall stations. The number of computations required for forecasts and displays increases significantly although hydrologic computations have been simplified to some extent by the development of computer and graphical methods for flow hydrograph computation and flood routing.

One of the more useful products to meet user requirements is the display of raw and computed basic data. Once the data are in the system, tabular displays of single and multiple parameters for a specified gaging station or project will probably be used more than any other product. Tabular and/or graphic displays for time series data that display historic, current, and forecasted data on a real-time basis are required. This product will display any data in the data base including the latest forecast. Forecasted data will begin at the time of the forecast, overlapping the latest recorded data, if necessary.

Data analysis and forecasting modules (software) will be constructed so that the forecaster can add, delete, or correct data at several points in the forecasting process. Watershed rainfall displays by 6-hour, 12-hour, or 24-hour periods will show individual stations and computed basin totals. Description of both tabular and graphical displays are included in Section 5.3.

The software should be structured to allow specified users intervention at several previously determined points in the forecasting and other analysis group modules.

Products described in paragraphs 5.3, 5.4 and 5.5 are those required for Water Control and are not necessarily related to present requirements. Numerous functions that presently require tabulating and displaying data in order to screen data, perform computations, make forecasts, and produce tabular reports will be performed automatically or with minor user intervention. User requirements reflect these changes by dealing more with display and edit products and the analysis group software rather than dwelling on data acquisition and database design and management.

5.3 Water Control Products. These products reflect the basic needs of water management personnel in performing their assigned functions. The products are organized to some extent by function beginning with tabular displays of single data elements and expanding to the fixed format reports disseminated periodically to other users and of the graphical displays. Data Acquisition Group, Data Base and Analysis Group programs used will be imperceptible to most users. They will use Data Base Utilities group software items, primarily the display and graphical edit unit to produce required products. The remainder of this section contains descriptions of specific products to meet user requirements.

5.3.1 Data Displays. This is a basic user requirement: Display of any data element available in the data base including pertinent data, rating curves/tables, storage vs. elevation data and basic data should be easily accessible by all users. Menu driven displays would aid casual users leading them through a series of menus to the data needed. More knowledgeable users will be able to go directly to the product desired. Examples of these displays are shown on Figures 5-1 and 5-2.

All time sequence displays will be on an hourly basis where the parameters are available hourly or more often. Observed data will be maintained a limited time; therefore, displays going back prior to the archiving period will be displayed on whatever basis is available. Displays of forecasts will be in 6-, 12-, or 24-hour periods depending on the time increment used in the forecast. Displays of short-term data will be displayed in hourly increments unless the all parameter is specified, then every reading is displayed.

Data displayed by any of these displays may be changed by certain users. Access to the data changing mode will be restricted to specified users and/or terminals by access codes.

Any parameter read in, converted, or computed, can be output using the "Display" program. Station names(s), parameter(s), time period and time increment are input.

The software sets up the format in the order specified by the user. If the data are not available in the specified time increment, the program will select the next longer increment available for output.

5.3.1.1 Single Parameter - Single Site. Display of the last available reading of a single parameter from one specified site (figure 5-3). Any single data point along with the date and time of reading can be displayed on the console. Access should be by entering station name and parameter.

5.3.1.2 Multiple Parameters - Single Site. Multiple parameters may be displayed using a similar input format (figure 5-3). Output will be the latest verified readings or computed values. Access will be by entering the station name followed by the parameters. Output format will include date/time, project name, and parameters.

5.3.1.3 Single Parameter - Single Site - Time Series. Most single parameter displays need a reference to previous readings or to a definite reference point, to be fully useful. It is essential, therefore, to be able to display time sequences of individual parameters. Access to time sequence data should be as easy as to the previous products. From a terminal the user will enter the station name, parameter(s) and the length of a time desired. Data are displayed on an hourly basis beginning "T" hours before the last hourly data point in the file. Examples of input and output are shown on Figure 5-4.

5.3.1.4 Multiple Parameter-Single Site-Time Series. Time sequence multiparameter displays are useful tools to determine current conditions at a project. Displays of lake elevation, inflow, outflow, rainfall and other parameters aid users when making real time water management decisions. By looking at a time sequence display of inflow, for example, a user can tell where a runoff hydrograph is in relation to peak. Other useful tools for real time water control are pool elevation and rainfall. This product is available by entering the project name, parameters and time in hours. An example is shown on Figure 5-5.

5.3.1.5 Multiple Parameter - Multiple Site - Time Series. Allow the user to look at more than one project's data simultaneously. Parameters will be displayed in the time sequence specified by the user. Parameters not available will be omitted. The Arkansas River Locks and Dams and run of river hydropower projects with hour to hour flow changes are conclusive to this type display. An example is shown on Figure 5-6.

5.3.1.6 Multiple Parameter - Watershed - Time Series. Time series data displays for single or multiple parameters over a watershed or basin include incremental rainfall for all stations in a basin with weighted basin rainfall, flows for major flow stations including intervening area flows and routed project releases. An example is shown on Figure 5-7.

5.3.2 Graphics Displays. Graphics displays of point, and averaged (computed) data, both historical and forecasted, are a necessity to water managers both from a working standpoint and in briefings. Basically five types of displays are included in this discussion. Each must be capable of expansion to some extent. All of the CRT graphics will have the capability for the user to change any data item or graph displayed, interactively, with graphics pen and on the CRT. The user can, at his discretion, update the data base with the corrected (changed) data.

5.3.2.1 Data Point Plots - Data point plots are time series graphical representation of any single data item (Figure 5-8). Items such as instantaneous readings of pool elevation, tailwater elevation, stage, flow, individual outlet release, total release, reservoir storage temperature, dissolved oxygen, conductivity, pH, and generation can be plotted as single point on a time series plot. The list is not complete but will expand as the data base expands. Points may or may not be connected as the user specifies.

5.3.2.2 Average Data Plots. Average data plots are time series graphical presentation of averaged data such as reservoir inflow or generator (MWH). Displays of this type (Figure 5-9) will use a connected unfilled bar-graph type plot of the average value during the time period. The system will have the capability to call the graphical displays using basically the same commands used for the previous tabular displays.

5.3.2.3 Hydrograph Plots. Hydrograph plots (Figure 5-10) are necessary to present flow hydrographs as smooth lines. The data are the computed average over varying time periods. This plot will utilize area balancing and flow peak computing algorithms to produce a smooth line display. Scales will be developed by the software but may be altered by the user at his discretion.

5.3.2.4 Map Plots 1. These plots will use base maps with overlays of point water control information such as precipitation, river stages, discharges, flooded areas, snow depth and water equivalence, API's etc. These are to be overlaid over user selectable base maps such as regional maps showing user selectable features such as major rivers and tributaries, major cities and highways, primary river gages; division maps showing lake projects, district boundaries, division and district office symbols;

district area maps with major river basins, rivers and tributaries, significant cities, major river gages, lake and levee projects, major highways; State maps; river basin maps; watershed maps upstream and downstream of each lake project with pertinent details such as tributaries and subbasins, key rainfall and river stations, levees, etc. Display capability will include at least five data points for each station using different colors for each set of data points and flashing capability when a value exceeds a threshold such as "NWS Flood Stage," "operating stage," "critical" stage, API, etc. See Figure 5-11.

5.3.2.5 Map Plots 2. These displays will use the same base maps and data as Map Plots 1 but will have the additional capabilities to (a) plot isohyets and computed average basin/watershed rainfall from the isohyets and (b) plot snow depth and water equivalent isohyets. Snow water content isohyets overlayed on contour maps with the runoff potential, in inches, computed for various contour intervals is used to determine spring snowmelt runoff by Albuquerque District. This product will compute potential runoff volumes from various elevations with summations on a watershed-basin basis. See Figure 5-12.

5.3.3 Data Analysis and Forecasts. User requirements in this area will vary slightly from district to district. Most data analyses and forecasts are now done once a day using manual methods. Therefore, most of the forecasting tools, methods, and procedures have been developed for the analysis of data and forecasting in 24-hour increments. This Water Control Data System will increase the water management users' capability to make forecast by significantly reducing computation time and providing periodic data updates unobtainable by previous methods. User requirements in the forecasting area are based on anticipated water management users' needs rather than on present practice. All of these products will be written to accommodate 6-, 12-, or 24-hour forecast periods anticipating development of forecasting tools for shorter periods especially on smaller watersheds.

5.3.3.1 Basin-Watershed Rainfall-Runoff and API's. Basin rainfall is displayed in the same format as described in paragraph 5.3.1.6 and shown on Figure 5-7, listing individual station rainfall amounts and the computed watershed weighted rainfall. Rainfall will be displayed in periods compatible with the forecasting module for the particular basin (6-, 12-, or 24-hour) unless otherwise specified. Individual rainfall values displayed can be changed in this module and the weighted rainfall recomputed. Once the station/basin rainfall is verified by the user, the station data are updated in the data base and the watershed API is updated. API's for the past 48 hours are then displayed, by forecast periods, along with watershed/

subwatershed rainfall and runoff in inches. (See Figure 5-13.) The API's and runoff when verified by the user are stored for further use. Precipitation indicies will be computed every 6 hours (MN, 6A, Noon, 6P) based on available data. A separate display or printout every 6 hours will list those stations where experienced rainfall values indicate possible runoff.

5.3.3.2 Streamflow Forecasts. Streamflow forecasters utilize tools which apply computed runoff (in inches) added to the previous forecasted flows and base flows to develop the full flow routing and combining of hydrographs from upstream stations and/or project releases. The water management user needs the capability to display each area or subarea hydrograph (preferably graphic) either as a single total hydrograph or segmented hydrograph showing routed upstream hydrographs; intervening area flow hydrographs and base flow hydrographs at the site. Hydrographs are computed by application of runoff (in inches), as computed in paragraph 5.3.3.1 above, to unit hydrographs for the area. Display for a single station is shown on Figure 5-13. Flow forecasts at any point may be altered by the user based on previous experience. Station forecasts, when verified by the user, will be stored for output by other users.

5.3.3.3 Reservoir Inflow and Operational Forecasts. Reservoir inflows are forecasted using the method described in paragraph 5.3.3.2 above. These forecasts should be available for a single reservoir or a system or reservoirs. For reservoir forecasts the user requirements include display of experienced and forecasted project inflows, control point(s) flows, both with and without reservoir releases, periodic reservoir releases and pool elevations (Figure 5-15). Initial forecasts will be made using the approved water control plan for the project. This forecast will be stored for future reference. The user may alter and rerun the forecast by changing the operating stage/stages, specifying reservoir release schedules, or changing the reservoir inflow hydrograph and/or control point intervening area hydrograph, both time and volume. Flow hydrographs, pool elevation and release schedules, when verified by the operator, will be stored for use in forecasting at downstream points and displays for briefings.

5.3.3.4 Long-Range River Forecasts. Long-range flow forecasts are required in certain situations for maintanence, navigation, low flow, and flood operations particularly on the larger rivers. These forecasts for specific stations shall allow user intervention for the selection of the desired flow conditions. These flow conditions will be based on historical statistics. The user shall be able to select flows based on these statistics such as median, xx percentile, frequency, or a percent of median flows. The capability to analyze the flows for the past

30, 60 or 90 days to determine their relationship to the historical statistics is desired. This will be used to select forecast flow conditions. Forecasts would begin with current date or at a user selected point on the current short-range forecasted flows.

5.3.3.5 Long-Range Reservoir Forecasts. This product produces trend forecasts of lake levels based on user selectable flow conditions described in paragraph 5.3.3.4 above. Forecasts would be for a stated time period or until the lake reaches a specified level. The user can project reservoir emptying times based on a variety of inflow patterns (both to the lake and major control points) and regulating stage criteria. Output would be lake levels, release patterns, and flows and stages at downstream control points.

5.3.3.6 Hydropower Allocation Report. A tabular report of projected hydropower operations for the next month at all SWD hydropower projects (Figure 5-16). Inflow forecasts based on percent of median flows for the previous 30 days and first of current month to date and hydropower operations are used to project the beginning of the next month pool elevations. Inflows for the next month are estimated by applying the percent of median flow computed for the previous 30 days to the median inflow for the month being computed (up to 100 percent). Maximum, minimum and recommended hydropower generation allocations are computed. The maximum allocation is based on the allowable pool level drawdown for each project. The minimum allocation considers only releases required for water quality and fisheries operations. The recommended allocation is based on: (a) generating to meet system or plant loads while balancing the pools and meeting minimum releases and (b) firm energy output from each reservoir or system of reservoirs. The time period should be user specified from 1 week to 1 year with output weekly or monthly for extended periods.

5.3.3.7 Navigation Taper. This product is similar to long-range trend forecasts but operates the Arkansas River Basin projects for a specified flow pattern at the Van Buren, Arkansas, gage. Figure 5-17 shows the Van Buren Guide Curve for flood control operations. The regulated Van Buren flow is based on the equivalent percent of flood control storage used in the major flood control projects in the basin and the time of the year. Project and intervening area inflows are projected using a percent of median flow which is user selectable (default value would be 100 percent). Output displays will show each project's daily inflow, outflow and pool elevation, the equivalent percent of storage used, target flow at Van Buren and forecasted flow at Van Buren. Reservoir release patterns for any project(s) may be set for the entire period or any portion of the forecast period. Algorithms used in this product should be applicable to most multireservoir systems operated for a single control point by

using data sets for the specific basin. The display should be available in tabular or color graphical form. The Van Buren hydrograph should be displayable showing each individual project contribution to the total hydrograph. The user should have the capability to modify the Van Buren hydrograph via use of a graphics tablet and then recompute the individual project release requirements.

5.3.3.8 Long-Range Forecasts - Reservoir Systems. This product is similar to the long-range forecasts for both rivers and lakes and the "Navigation Taper" product described above. The user selects flow patterns or flow ratios for the entire basin or specific areas within a basin. Initial output shows project regulation and control point flows and stages using the approved water control plan. The user may alter inflow volumes, reservoir release patterns, and control point criteria for additional runs. Forecasts are from the current date until all projects are emptied. Output shows individual project inflow, release and pool elevations, control point flows and stages.

5.3.4 Reports. Reports are periodically recurring products generally using fixed formats. The more common products in this area are the daily and monthly lake reports. Some of the products may have several formats for the user to choose from. Products are broken down into three areas: (1) regularly recurring reports, (2) as required reports and (3) user selectable format reports.

5.3.4.1 Regularly Recurring Reports. These reports are generally fixed format reports required on a periodic basis. Most utilize a mixture of point and daily average data derived directly from the data base. These reports will be initiated at predetermined times by the Master Controller but executed only when all data are available. The reports may be initiated manually when necessary.

5.3.4.1.1 Morning Lake (Project) Report. Tabular summary report of current status of all lakes including: midnight and 7:00 a.m. (or 8:00 a.m.) lake stages; 24-hour change in stage a.m. to a.m., storage used in feet above or below top of conservation pool and percent conservation or flood storage used; total inflow, total releases, hydropower releases, water supply releases, water supply pumpage and/or diversion, leakage, mn. to mn. and current a.m. release rate; and 24-hour project rainfall. Each user office will have a standard format and may have several alternate formats displaying other parameters. Figures 5-18 through 5-20 are examples of the morning lake report.

5.3.4.1.2 Morning River Report. Tabular report of stages, discharges, rainfall, water temperature, other water quality parameters and 24-hour change in stage. Time and format for report shall be user selectable based on user needs. Stations above "flood stage" or other designated stages are flagged. Those exceeding other parameter checks are also flagged or tabulated separately. Report formats will vary from office to office. An example is shown on Figure 5-21.

5.3.4.1.3 Daily Generation Report. Tabular report of daily hydropower generation at all power projects. Report includes week to date (beginning on Mondays) and month to date figures, weekly and monthly allocations, carryover (accumulation of energy greater than or less than "firm") since the pool went below the rule curve (returns to zero when the rule curve is exceeded), pool elevation (a.m.) and maximum allowable drawdown. Also includes notes on the operation from each user. Writes to weekly and monthly files. An example is shown on Figure 5-22.

5.3.4.1.4 Monthly Lake Report. Tabular or graphic summary of daily project operations to include: midnight and a.m. pool elevations, midnight pool storage, 24-hour release (midnight to midnight) both total and power, water supply pumpage or irrigation diversion, evaporation, adjusted inflow, 24-hour project and basin weighted rainfall (a.m. to a.m.). Report will include monthly totals, maximum, minimum, and mean values for each parameter as well as a statement of total water supply withdrawn, leakage and other losses as needed to balance the monthly water budget and the total energy produced. Examples are shown on Figures 5-23 and 5-24.

5.3.4.1.5 Monthly River Report. Tabular listing of all stations 7:00 a.m. gsge readings for each day of the month with maximum and minimum reading for each gage. (More detail is needed on this product to describe station computations of mean daily flows for publication from telemetered data.) See Figure 5-25.

5.3.4.1.6 Monthly Hydropower Reports. Tabular report of daily generation for any or all SWD projects with hydropower. Include total minimum, maximum and mean energy. For storage projects compute energy in storage at the beginning and end of the month. See example on Figure 5-26.

5.3.4.1.7 Annual Lake Report. Tabular or graphic. Annual reports of project data are used in several reports with varying formats. The reports may contain average monthly inflow, and release; maximum, minimum and end of the month pool elevation: pool contents at end of month; basin monthly average rainfall and yearly totals. The program should update the average monthly inflow, release and basin rainfall for the period of record and print for comparison. One format is a tabular report of midnight lake contents for USGS publications. Examples are shown on Figures 5-28 and 5-29.

5.3.4.1.8 Annual River Report. Similar to annual lake report showing maximum and minimum monthly stage, monthly total rainfall and long-term average rainfall. Also computation and displays in USGS formats for publication. See Figure 5-30.

5.3.4.1.9 Other Annual Report Products. These products are required annually for inclusion in the SWD Reservoir Control Center Annual Report. Samples of the products are shown on Figures 5-31 through 5-33. These products include: (a) a table displaying the status of Water Control Manuals for all SWD project and Section 7 projects within SWD; (b) Annual hydropower production at a SWD powerplant; total SWD projects power production annually and monthly within any year (historical), (c) Bargraphs of total annual flow for any flow station (updated annually), (d) total annual inflow into project, (e) Maximum, minimum, median, mean flows updated annually, (f) Other statistical flow information updated at an event and annually including frequency and duration analysis. The end products are too numerous to list here; however, most of these products will be available monthly as the data base is verified and updated and annually updated with published flow information, if available.

5.3.4.2 As Required Reports. These reports are produced on an intermittent basis depending on hydrologic conditions. Reports range from flood conditions to drought-low flow conditions reports. Reports are generated from the data base accessing output from previously run forecasts.

5.3.4.2.1 Flood Conditions Report. Report of current flood conditions in tabular form showing morning stages for selected stream gages, 24-hour change and experienced or forecasted peak and date for the current event. Maximum stage of record and date are also included. Reservoir-project data include current elevation and 24-hour change, inflow and outflow for past 24-hours, peak inflow this event (either experienced or forecasted) and date, experienced or forecasted peak pool elevation this event and date, and maximum of record and date. One format for each district will be similar to tables required by ER 500-1-1, Appendix A. Other formats for internal distribution will be furnished by districts. Figures 5-34 and 5-35 are examples of this report.

5.3.4.2.2 Water Supply Accounting. This product should be automatically initiated as soon as the data for the monthly lake report data are verified. These reports show the volume of water withdrawn by each user, prorates inflows, losses and evaporation to the user and computes each user's remaining storage in acre-feet and percent. The report is prepared at the end of any month that the pool is below the top of conservation pool. Computations begin from the date the pool receded below the top of conservation pool. An example of the output is shown on Figure 5-36.

5.3.4.3 User Selectable Format Reports. These are reports which can be created to serve a special need of the user. Generally, these would be created using the AZ7 Query Language report writer to extract existing data from the master data base. These data can then be displayed in a format suitable to the specific user.

5.3.5 Daily Regulation Products. These products are used daily for short-range forecasts, data transfer between offices, hourly operation of navigation and run-of-river hydropower projects, and public relations information. Products in this group involve many of the day-to-day water management activities.

5.3.5.1 Daily Water Budget. This is the basic computation each morning by project regulators to check the validity of project data and operations for the previous midnight to midnight period. Once the project operations and data are verified, it is then acceptable for use in records, files, and reports. The program should perform basic computations for inflows minus releases and losses equal change in storage for all lake projects. Basic data would include: gate settings for spillways, conduits, valves, etc., with time of gate changes and headwater and tailwater elevations, power turbine releases, electrical generation, water supply withdrawals, evaporation, leakage, etc., and necessry rating tables and storage tables. Output would consist of midnight to midnight inflow, releases (total and by source), losses, change in storage; midnight and 7 a.m. storage, 7 a.m. instantaneous releases; time and magnitude of gate changes and resultant instantaneous releases by source and total along with headwater and tailwater elevations. Output to be filed in the data base by project for later retrieval in report building requirements. Output would be flagged in event of unusual data or imbalance in budget computations so the project regulator can coordinate any needed revisions with project personnel and the project data base manager.

5.3.5.2 Polling Report. Report of all stations for which data has not been obtained by automatic data collection and all stations reporting data which did not pass the data editing criteria. Time period is user selectable (last 4, 6, 12, or 24 hours up to 96 hours) but one report will be automatically printed and stored each morning following the 7 a.m. data acquisition and screening.

5.3.5.3 Daily 3-5 Day Project Inflows. This product computes daily inflow forecasts for all projects. Forecasts are computed as soon as the daily water budget are completed. Tandem project inflows are computed as intervening area flows. Computations are based on a normal recession curve for each site unless there is a current flow forecast available as output from the Reservoir Inflow and Operational Forecast module (paragraph 5.3.3.3). Forecasts will be displayed at user's request and may be altered in the display mode. User verified forecasts are stored for access by other products.

5.3.5.4 Hydropower Project Inflow Forecasts. Hydropower project inflow forecast for 5 days are furnished to the Southwestern Power Administration (SWPA) daily for their use in planning hydropower operations. Output from the previous product for hydropower projects only is tabulated and printed, then stored for automatic transmission to SWPA when verified. Output is a 1-page table showing projects, previous days inflow and forecast inflows for the next 5 days. See Figure 5-37.

5.3.5.5 Power Scheduling, Daily. This file will be updated daily by SWPA and may be accessed by all districts. File will include daily generation scheduled for current day and the next 4 days by SWPA for all SWD hydropower projects. Reports will include project names, date, generation in MWH and daily discharge in day-second-feet.

5.3.5.6 Power Scheduling, Hourly. These schedules are produced daily (5 days per week) for projects with run of river hydropower operations. SWPA will initiate a forecast file of hourly generation from the present until midnight of the following day or the next scheduled work day.

5.4 Support Requirements.

5.4.1 Applications Executive - supervises overall applications of the software operation. Schedules and controls activities and support programs.

5.4.2 Systems Status Monitor - monitors applications programs for run times and type of termination. Abnormal termination will result in logging of error. Output formatted report of log file upon user request. Purge or archive log file upon user request.

5.4.3 Access Monitor - user interface with VOS operating system and applications software. User friendly language with menus and prompts.

5.4.4 Information System - provides information on applications software and allows logging of user comments. Maintains a short or complete description (user selectable) of each applications module. Should contain information regarding contents, functions, and user instructions.

5.4.5 Training System - provides I/A session for the new user of applications software components and their uses.

5.4.6 Auto-Alert - notification of proper personnel of events which require quick action such as heavy rainfall, high flows or equipment failure. Should notify proper personnel by auto-dial according to a list of alerts and responses.

5.4.7 Task Monitoring System - maintains and displays upon request, work schedules, assignments, and status of various water control tasks.

5.4.8 Simulation and Training - prepares simulated or historical flood emergency exercise data, procedures, and reports. Evaluates performance of required water control functions.

5.4.9 Remote Conferencing - enables two or more I/A terminals within the SWD WCDS to display the same information concurrently for conference purposes. Shall include terminals at same site or different sites.

5.4.10 Message Preparation and Exchange - prepares, addresses, and labels messages to others at the same site or different site and schedules messages to be transmitted at a later time.

5.4.11 Automatic Reconfiguration - supports automatic reconfiguration of applications software and hardware, in cases such as a single processor failure at a dual processor site. Contains fallback and recovery procedures.

5.4.12 Archiving - software for moving all or part of files from disc to tape, recalling files from tape to disc, copying files from disc to disc and maintaining an inventory of files by tape.

5.4.13 Data Entry - Shall support manual entry via interactive terminal and digitizer, automatic collection of GOES data from NESS (self-timed and random-adoptive), GOES data from WES, DARDC, NWS, and project microcomputers through auto-dialer.

5.4.14 Data Screening - shall be performed on all data entry that is applicable. Each data field for which appropriate upper and lower values can be established will be checked to ensure that it does not exceed a predefined range. Consistency checks on groups of data elements for which specific arrangements of values (cross field checking) or data completeness requirements can be predefined will be made. After range checking, groups of data elements will be formed into records for subsequent update of the data base at predetermined intervals. Sufficient source information will be appended to the edited update records to allow retrieval to correct errors found subsequent to data base update processing.

5.4.15 Data Transfer - prepares a group of predefined data elements and automatically transmits them to another site by auto-dial. Initiation shall be either automatically upon a predetermined clock time or user request. Data transfer requirements will be site to site within SWD, division to LMVD, districts to NWS, all sites to field microcomputers, etc.

5.4.16 Auto-Dial. Capability to auto-dial designated sites via phone and retrieve or transmit data. Auto-dial to be clock driven or user activated from a terminal.

5.5 Special Requirements.

5.5.1 Albuquerque.

5.5.1.1 Map Overlay - contour map overlay of mountainous areas in addition to the overlays described in paragraph 5.2.1.9.

5.5.1.2 Basin Diagram - line diagram of basin with reservoir data and flow at key station. Should be user selectable for report type (TTY hardcopy or TTY graphics terminals). Figure 5-38.

5.5.2 Fort Worth.

5.5.2.1 Texas Water Commission - tabular report (monthly) showing end of month pool elevations and storage for all projects in State of Texas. Figure 5-39.

5.5.2.2 Water Diversion (U.S.G.S.) - annual tabular report of monthly water supply diversions in acre-feet. Figure 5-40.

5.5.2.3 Dallas Water Utilities - monthly tabular report of water supply withdrawn from the Trinity Lakes. Figure 5-41.

5.5.3 Galveston.

5.5.3.1 Coastal Tides Map - map plot of observed coastal tides.

5.5.3.2 Navigation Channel Forecast - tabular and/or graphical report of velocity and stage forecasts in navigation channels.

5.5.3.3 Tide Forecast - tabular and graphical report of tide forecast.

5.5.4 Little Rock. - user selectable (graphics terminal or drum plotter) plot of steady-state and instantaneous water surface profiles.

5.5.5 Tulsa.

5.5.5.1 Holdouts - tabular report of Van Buren and Fulton holdouts to be transmitted to Little Rock District.

5.5.5.2 TAPER - user selectable (graphics or tabular) report of reservoir outflows necessary to meet target flows at Van Buren based on individual guide curves and balancing scheme. Figure 5-42.

5.5.5.3 Flood Benefits - tabular annual report including flood benefits for Bureau of Reclamation projects.

5.5.6 SWDO.

5.5.6.1 Lakes in Flood Pool - tabular report of all lakes within SWD that are in flood pool, including project, pool elevation, inflow, outflow, percent of flood pool occupied.

5.5.6.2 River Stations Above Floodstage - tabular report of all river stations above floodstage or regulating discharge, to include station name, floodstage, last reported stage and forecasted peak and time.

Example

W A T E R C O N T R O L M E N U LR-1

SELECT DESIRED BASIN

A WHITE RIVER BASIN

B BUFFALO RIVER

C NORFORK RIVER

D BLACK RIVER

E LITTLE RED RIVER

F ARKANSAS RIVER BASIN

G PETI JEAN RIVER

H FOURCHE LA FAVE RIVER

J RED RIVER BASIN

K LITTLE RIVER

L ROLLING FORK

M COSSATOT

N SALINE

?____

Figure 5-1

Example

W A T E R C O N T R O L M E N U LR-W-1

WHITE RIVER BASIN

SELECT DESIRED PROJECT OR LOCATION

A	BEAVER DAM	K	CLEARWATER DAM
B	TABLE ROCK DAM	L	MOUTH OF BLACK RIVER
C	OZARK BEACH DAM	M	NEWPORT
D	BULL SHOALS DAM	N	AUGUSTA
E	MOUTH OF CROOKED CREEK	P	MOUTH OF LITTLE RED RIVER
F	MOUTH BUFFALO RIVER	Q	DES ARC
G	NORFORK DAM	R	CLARENDON
H	CALICO ROCK	S	NORRELL DAM
J	SYLAMORE	T	MOUTH OF WHITE RIVER

?_____

Figure 5-2

Example

To display a single parameter enter the STATION NAME and PARAMETER.

Enter:

```
FORT GIBSON;ELEVATION
```

Displays:

```
 7 JUN 82  1422       FORT GIBSON

   TIME   ELEVATION

   1415     552.42
```

Example

To display several parameters for a station enter STATION NAME and PARAMETERS.

Enter:

```
DARDANELLE;ELEVATION,TURBINE DISCHARGE,TAILWATER,TOTAL DISCHARGE
```

Displays:

```
25 JUL 82  1027       DARDANELLE

        ELEVATION  TURB DISCH  TAILWATER  TOT DISCH

          337.24     12,400      287.43     12,400

 TIME       1015       1000        1015       1000
```

Example

To display all parameters for a station enter STATION NAME,ALL

Enter:

```
 ABIQUIU,ALL
```

Displays:

```
7 JUN 82  0935       ABIQUIU

TIME      ELEVATION    GATE SETTING    RELEASE     INFLOW       RAIN
EVAP  TEMP
          POOL    TAILW     #1     #2              MN-MN     MN-

0700   6160.54 6031.96    0.8    0.8      493       480       520  0.06
0.35    68
```

Figure 5-3

Example

To display time series data for a single parameter at a single project
enter STATION NAME and PARAMETER.

Enter:

```
WHITNEY,HOURLY GENERATION,24
```

Displays:

25 JUL 82 WHITNEY GENERATION(MWH)

TIME	UNIT 1	UNIT 2	TOTAL
1000	0	0	0
1100	20	0	20
1200	15	15	15
1300	15	15	30
1400	15	15	30
1500	15	10	25
1600	15	5	20
1700	15	0	15
1800	10	0	10
1900	2	0	2
2000	0	0	0
2100	0	0	0
2200	0	0	0
2300	0	0	0
2400	0	0	0
TOTAL	122	60	182
0100	0	0	0
0200	0	0	0
0300	0	0	0
0400	0	0	0
0500	0	0	0
0600	0	5	5
0700	0	15	15
0800	2	15	17
0900	15	15	30

Figure 5-4

Example

To display multiple parameters for a single station enter STATION NAME; PARAMETER/S.

Enter:

DARDANELLE;GENERATION,POOL:

Displays:

25 JUL 82 1522 DARDANELLE

TIME	UNIT-1	UNIT-2	UNIT-3	UNIT-4	TOTAL	ELEVA
0100	0	0	0	0	0	337.23
0200	0	0	0	0	0	337.30
0300	0	0	0	0	0	337.33
0400	0	0	0	0	0	337.35
0500	0	0	0	0	0	337.40
0600	3	0	0	0	3	337.43
0700	25	0	0	0	25	337.43
0800	29	18	0	0	47	337.44
0900	35	35	0	0	70	337.43
1000	35	35	0	0	70	337.44
1100	35	35	0	0	70	337.45
1200	35	35	0	0	70	337.45
1300	35	35	0	0	70	337.44
1400	35	35	22	0	92	337.40
1500	35	35	35	0	105	337.35
1600	35	35	35	0	105	337.33
1700	35	35	35	0	105	337.33
1800	30	30	30	0	90	337.33
1900	30	30	30	0	90	337.30
2000	30	20	20	0	70	337.30
2100	35	35	35	0	105	337.28
2200	27	26	26	0	79	337.28
2300	19	17	12	0	48	337.30
2400	24	0	0	0	24	337.31
TOTALS	567	491	280	0	1338	
0000	0	0	0	0	0	337.35
0100	0	0	0	0	0	337.38
0200	0	0	0	0	0	337.42
0300	0	0	0	0	0	337.45
0400	0	0	0	0	0	337.49

Figure 5-5

Example

To display several parameters for two or more stations enter STATION
NAME; PARAMETER/S: STATION NAME; PARAMETER/S.

Enter:

DARDANELLE;GENERATION,POOL:DAM-9;POOL,RELEASE

Displays:

25 JUL 82 1522 DARDANELLE LOCK AND DAM 9

TIME	UNIT-1	UNIT-2	UNIT-3	UNIT-4	TOTAL	ELEVA	ELEVA	RELEASE
0100	0	0	0	0	0	337.23	286.80	6300
0200	0	0	0	0	0	337.30	286.83	9800
0300	0	0	0	0	0	337.33	286.45	9800
0400	0	0	0	0	0	337.35	286.34	9800
0500	0	0	0	0	0	337.40	286.29	9800
0600	3	0	0	0	3	337.43	286.15	9300
0700	25	0	0	0	25	337.43	286.00	9300
0800	29	18	0	0	47	337.44	286.00	9300
0900	35	35	0	0	70	337.43	286.15	14600
1000	35	35	0	0	70	337.44	286.15	14600
1100	35	35	0	0	70	337.45	286.32	14600
1200	35	35	0	0	70	337.45	286.43	14600
1300	35	35	0	0	70	337.44	286.43	14600
1400	35	35	22	0	92	337.40	286.53	14600
1500	35	35	35	0	105	337.35	286.60	14600
1600	35	35	35	0	105	337.33	286.72	14600
1700	35	35	35	0	105	337.33	286.81	21400
1800	30	30	30	0	90	337.33	287.00	21400
1900	30	30	30	0	90	337.30	287.11	26900
2000	30	20	20	0	70	337.30	286.93	26900
2100	35	35	35	0	105	337.28	286.86	26900
2200	27	26	26	0	79	337.28	286.77	26900
2300	19	17	12	0	48	337.30	286.80	26900
2400	24	0	0	0	24	337.31	286.64	17400
TOTALS	567	491	280	0	1338		AVG DISCH	16067
0000	0	0	0	0	0	337.35	286.44	17400
0100	0	0	0	0	0	337.38	286.34	17400
0200	0	0	0	0	0	337.42	286.23	17400
0300	0	0	0	0	0	337.45	286.11	14600
0400	0	0	0	0	0	337.49	285.95	14600

Figure 5-6

Example

To display multiple paramerter, time series data for a watershed enter WATERSHED NAME; PARAMETER/S; TIME.

Enter: JRED2, PRECIP, STAGE, 30 HR

INCREMENTAL PRICP

STATION	WEIGHT	0700	1300	0100	0700	TOTAL
Saffordville	.01	0.00	0.01	0.50	1.00	1.51
Dunlap	.33	0.00	0.00	0.60	1.10	1.70
Diamond Springs	.01	0.00	0.05	0.80	1.50	2.35
Wilsey	.15	0.00	0.00	1.00	2.00	3.00
Council Grove Dam	.20	0.00	0.00	0.95	1.80	2.75
Chalk	.16	0.00	0.00	0.60	1.30	1.90
Bushong	.14	0.00	0.00	0.20	0.80	1.00
Basin Av		0.00	0.00	0.67	1.37	

	R.S.	0700	2300	0100	0300	0330	0530	0615	0630
Council Grove	15.0	8.0	--	--	--	--	--	--	8.0
Americus	27.5	4.9	5.2	--	5.4	--	5.6	5.8	6.0

Figure 5-7

LOCK & DAM No. 13 - OUTFLOW HYDROGRAPH
1979

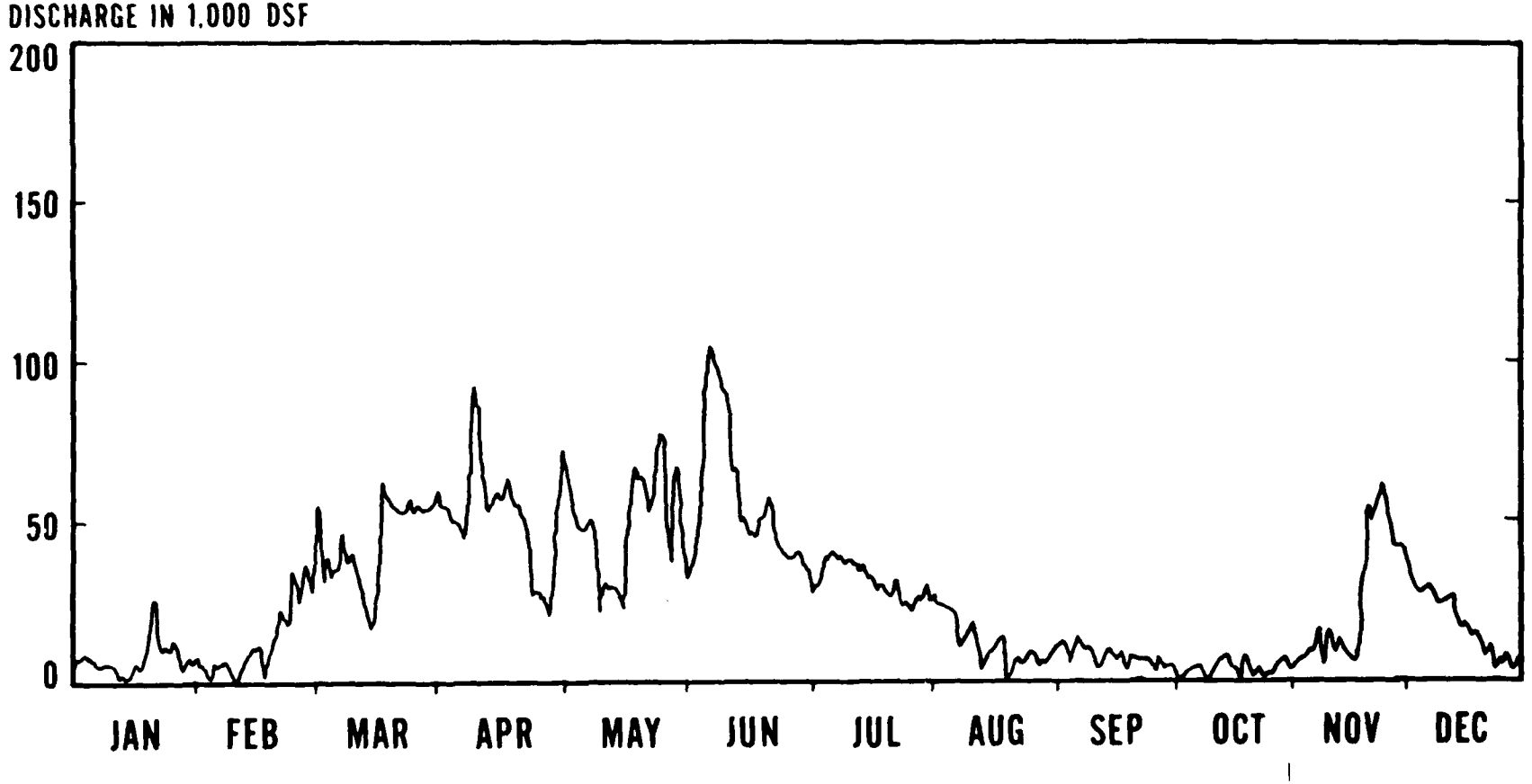

Figure 5-8

AVERAGE MONTHLY RECORDED FLOWS
ARKANSAS RIVER AT DAM No. 13, NEAR VAN BUREN, ARKANSAS

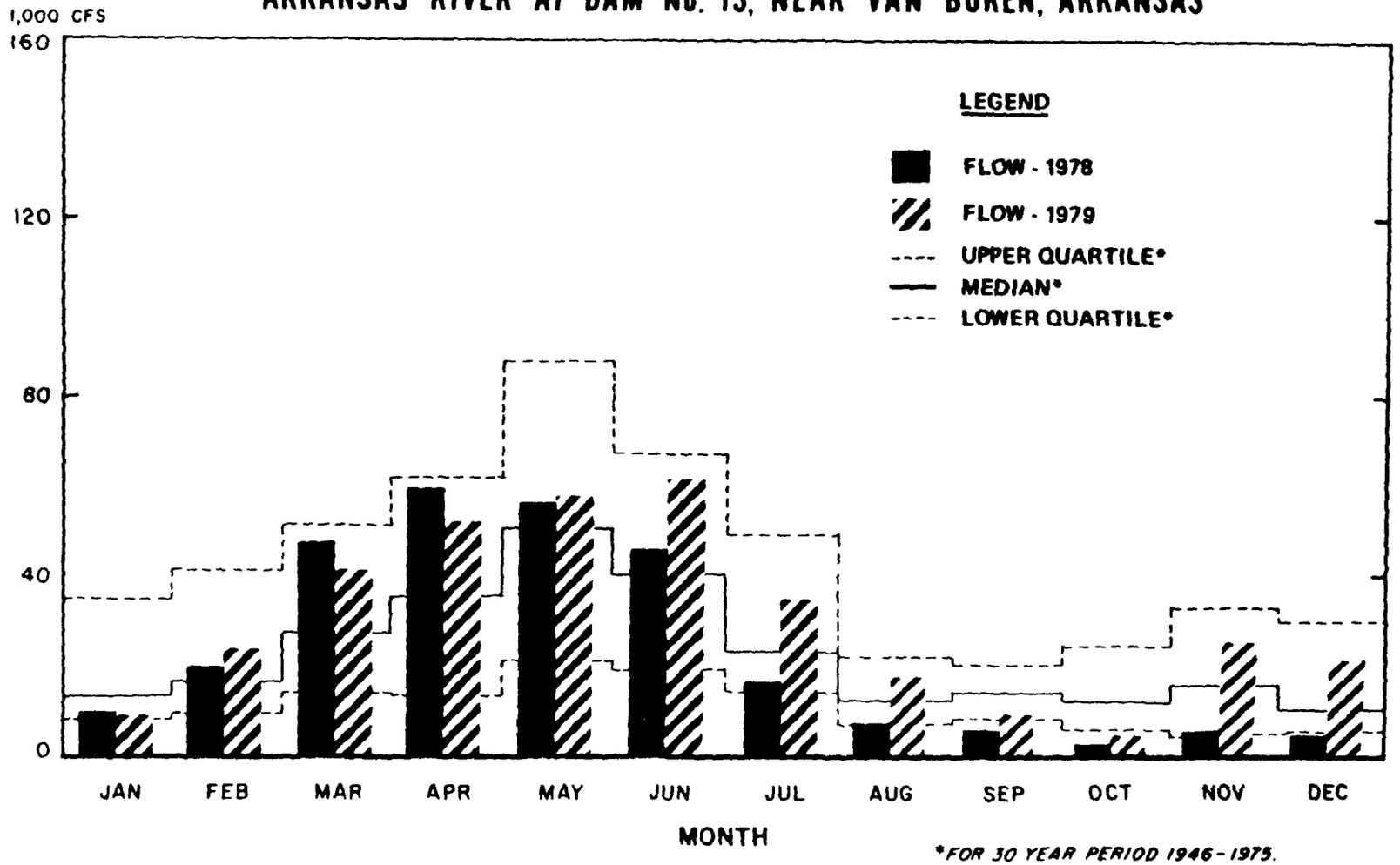

*FOR 30 YEAR PERIOD 1946-1975.

Figure 5-9

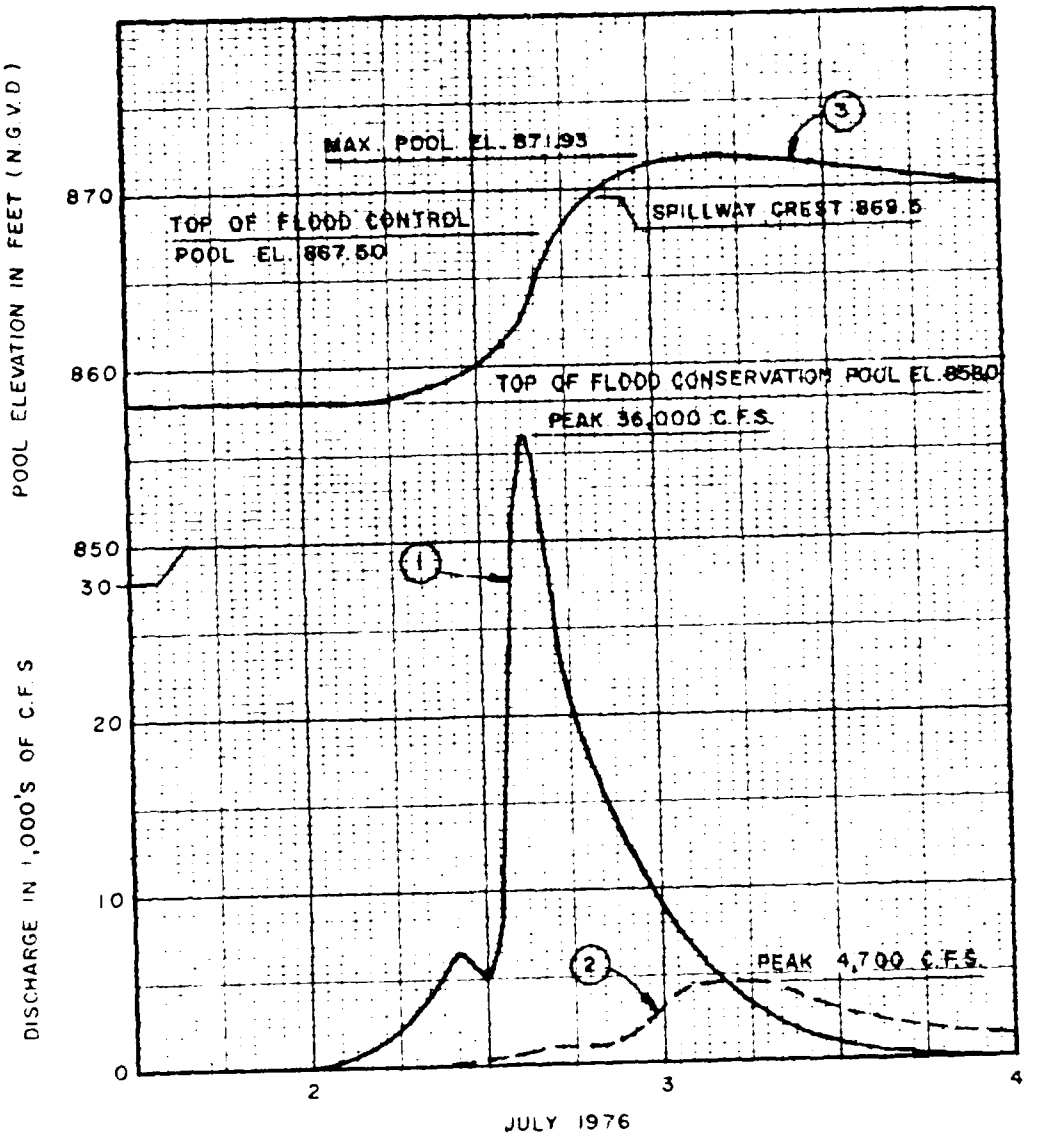
POOL ELEVATION IN FEET (N.G.V.D.)
DISCHARGE IN 1,000'S OF C.F.S.
MAX. POOL EL. 871.93
TOP OF FLOOD CONTROL POOL EL. 867.50
SPILLWAY CREST 869.5
TOP OF FLOOD CONSERVATION POOL EL. 858.0
PEAK 36,000 C.F.S.
PEAK 4,700 C.F.S.
870
860
850
30
20
10
0
2
3
4
JULY 1976
1
2
3

Figure 5-10

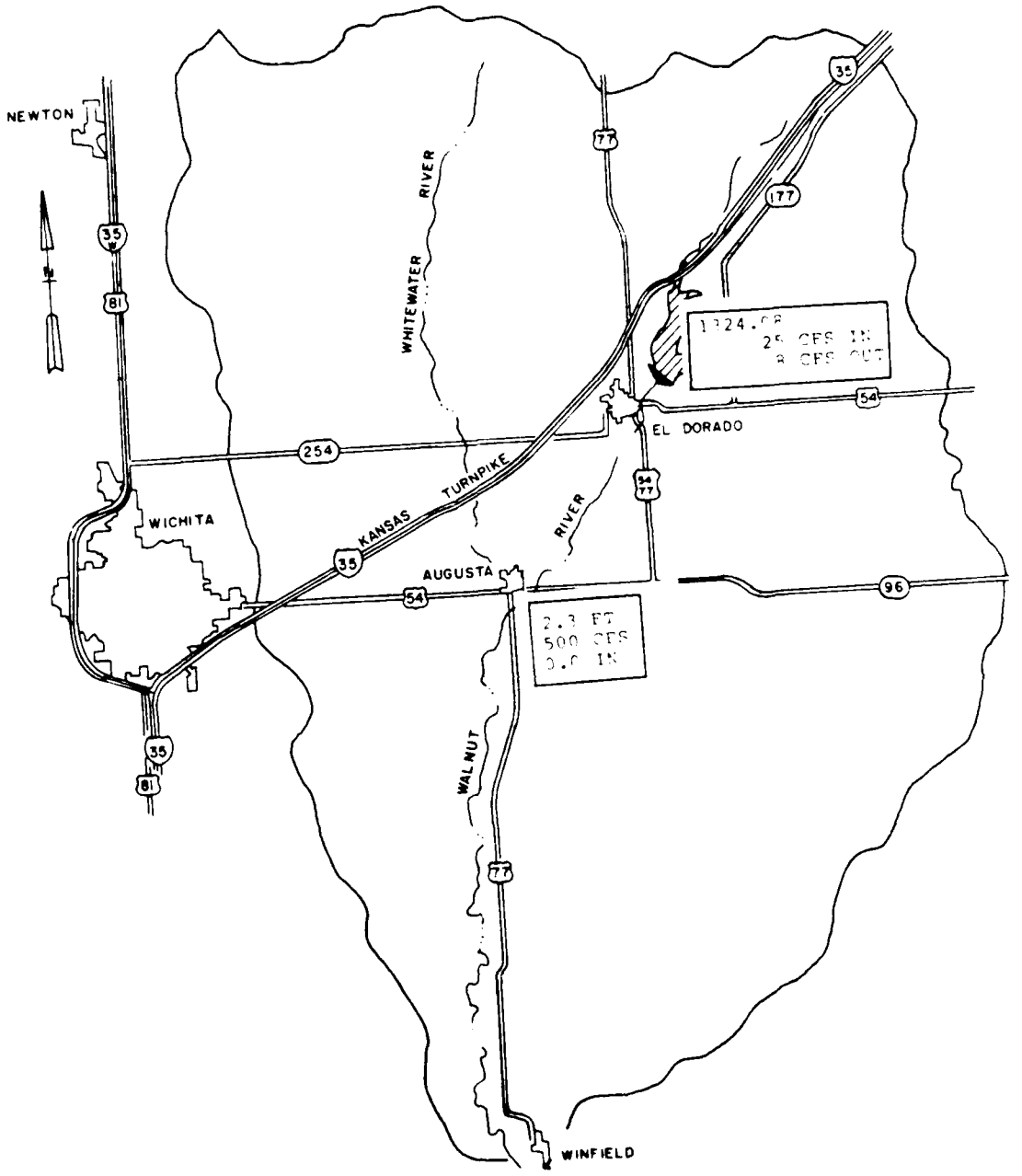
NEWTON
35
81
WHITEWATER RIVER
77
35
177
54
EL DORADO
254
WICHITA
KANSAS TURNPIKE
35
54
77
RIVER
AUGUSTA
54
96
35
81
WALNUT
77
WINFIELD

Figure 5-11

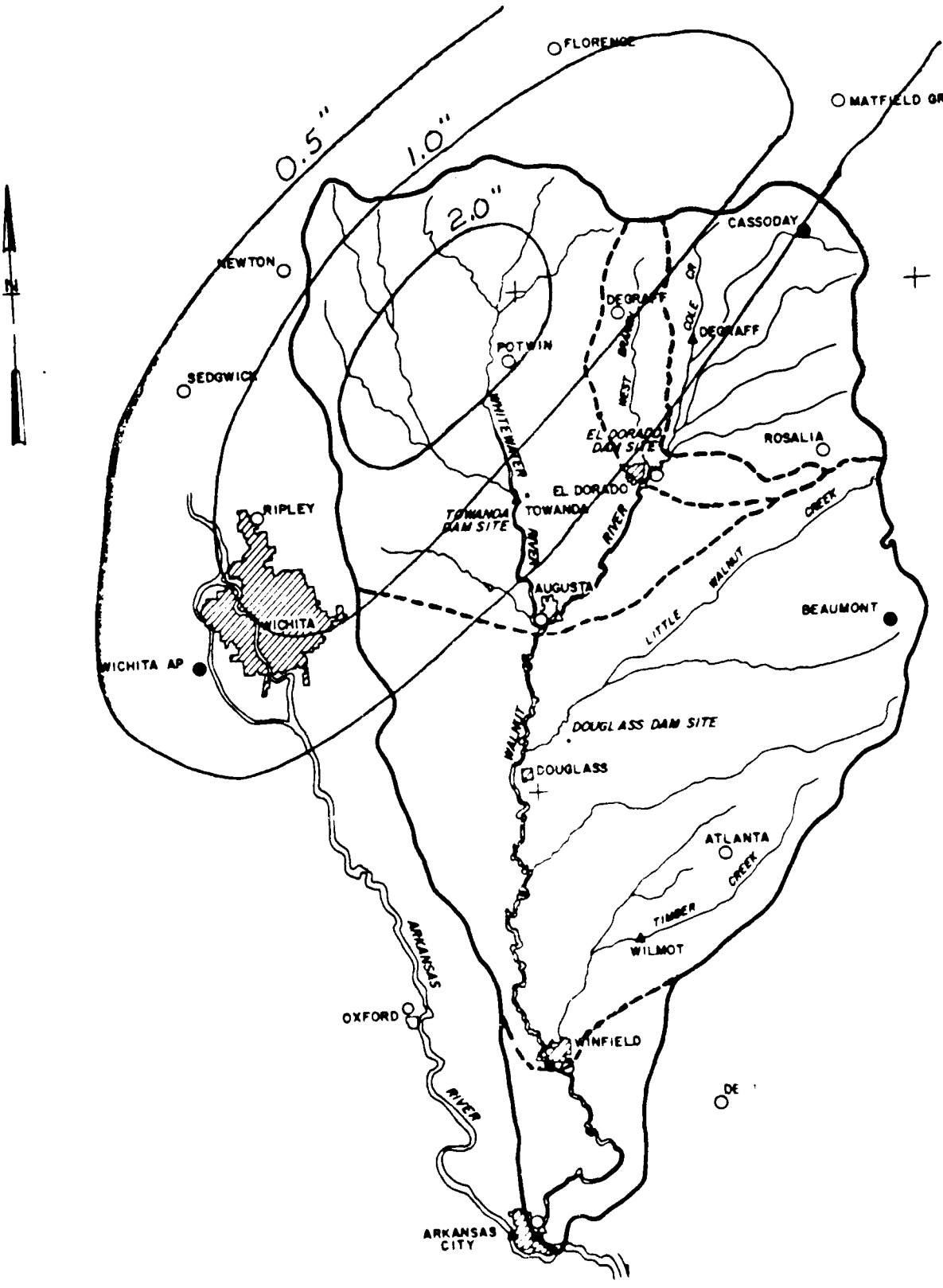

FLORENCE
MATFIELD GRE
0.5"
1.0"
2.0"
N
CASSODAY
NEWTON
DEGRAFF
COLE CR
DEGRAFF
POTWIN
SEDGWICK
WHITEWATER
WEST BRANCH
EL DORADO DAM SITE
ROSALIA
EL DORADO
RIPLEY
TOWANDA DAM SITE
TOWANDA
RIVER
RIVER
CREEK
AUGUSTA
WALNUT
LITTLE
BEAUMONT
WICHITA
WICHITA AP
DOUGLASS DAM SITE
WALNUT
DOUGLASS
ATLANTA
CREEK
TIMBER
WILMOT
ARKANSAS
OXFORD
WINFIELD
RIVER
ARKANSAS CITY

Figure 5-12

Example

Basin rainfall, API, and runoff for one or more basins for the period specified. See Figure 5-7 if desire to view individual station rainfall within a basin.

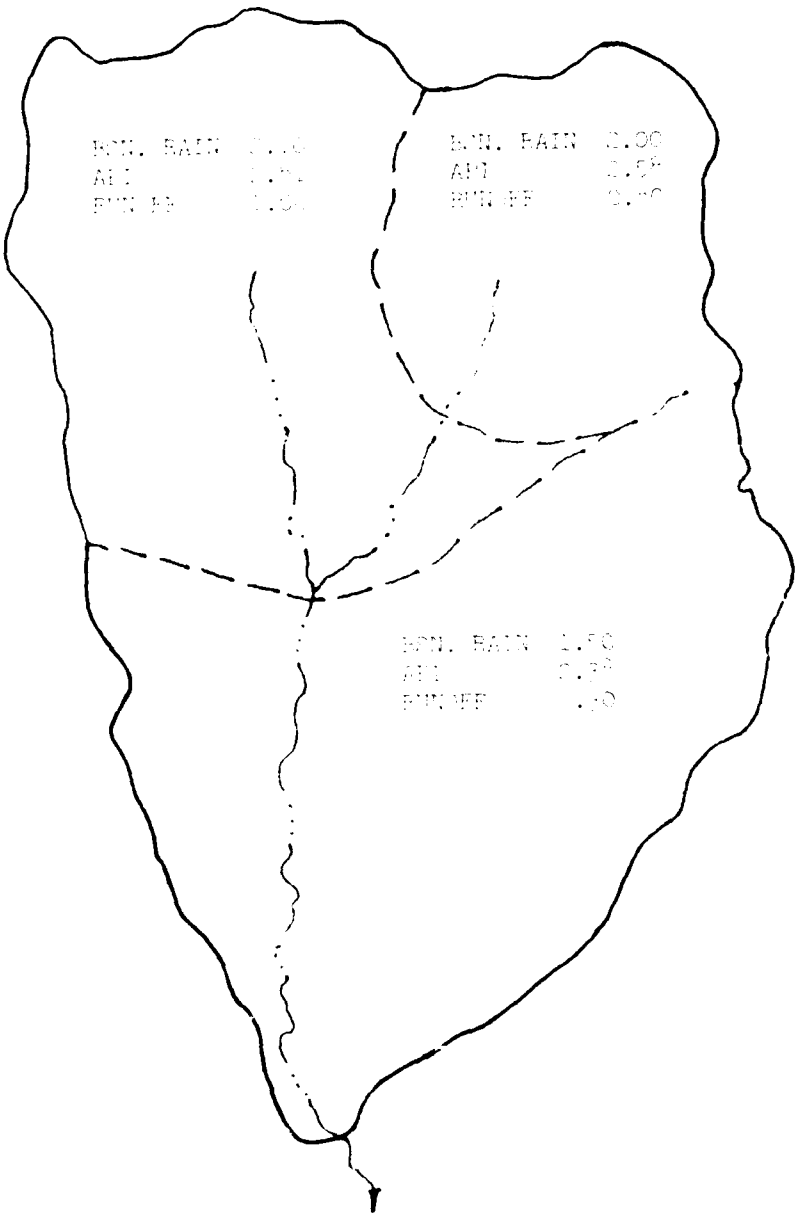

Figure 5-13

Example : Streamflow forecast

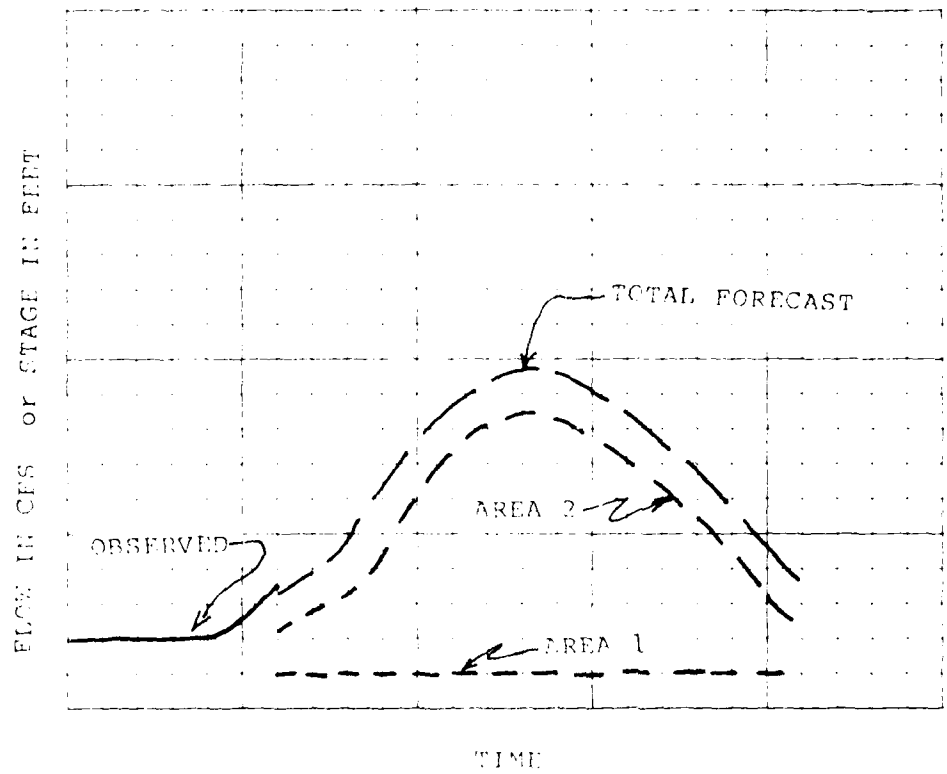

This example shows a display of the observed/forecast flows at a single station. The capability to show the individual flows that make up the total hydrograph is required. The various component hydrographs can be shown using color or shading. The user should have the capability to adjust the forecast curves via use of the graphics pen.

Figure 5-14

Example : Reservoir inflow forecast.

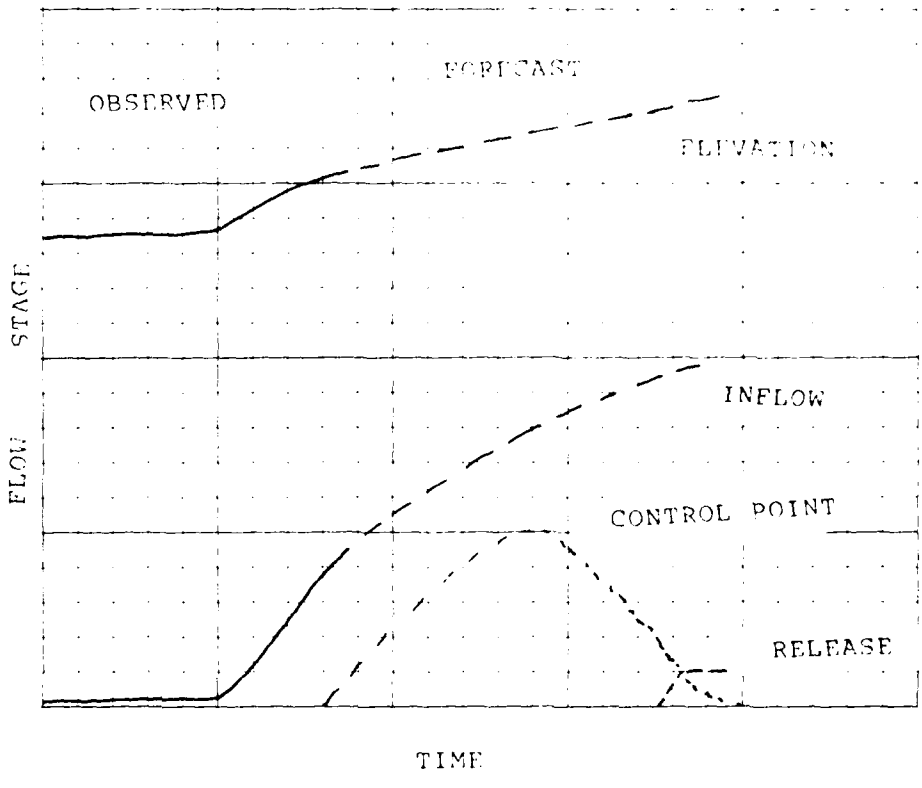

This example shows a graphical display of the observed and forecast inflows, pool elevations and outflow for a reservoir. Also shown is the control point flow. The user shall have the capability to alter and rerun the forecast.

Figure 5-15

2/1983 END OF MONTH CONDITIONS
RECOMMENDED ENERGY - FROM DISTRICTS

RESERVOIR	ELEVATION BEGIN.	ELEVATION END.	CAPACITY	FIRM	EXCESS1	EXCESS2	SPILL	OUTFLOW	PCT FULL
SAM RAYBURN	164.5	164.0	34.	10.00	0.	0.	0.	2813.	96.6
WHITNEY	523.5	524.3	32.	2.00	0.	0.	0.	436.	27.5
BLAKELY MT.			75.	12.00					
DEGRAY			68.	8.10					
T.R. + B.S.			62.	6.00					
BEAVER	1124.0	1125.8	129.	6.00	0.	0.	0.	626.	99.5
BROKEN BOW	597.0	593.5	111.	22.10	0.	0.	0.	2435.	80.6
DARDANELLE			146.	51.49	0.	0.	0.	21562.	
DENISON	614.0	612.9	39.	12.90	0.	0.	0.	3068.	76.5
DENISON SD.			39.	2.30	0.				
EUFAULA	582.5	582.5	88.	9.40	0.	0.	0.	2215.	81.5
FORT GIBSON			47.	13.81	0.	0.	0.	4771.	
GREERS FERRY	470.5	462.9	110.	65.70	0.	0.	0.	7012.	99.5
KEYSTONE	720.5	721.3	70.	6.60	0.	0.	0.	1806.	85.9
NORFORK	556.5	552.0	62.	29.80	0.	0.	0.	3442.	100.0
OZARK RESERVOIR			23.	14.60	0.	0.	14.47	18995.	
ROBT S. KERR			127.	30.50	0.43	0.	0.	13980.	
TENKILLER	632.0	629.7	42.	14.10	0.	0.	0.	2003.	91.1
WEBBERS FALLS			23.	12.01	0.	0.	0.	8613.	
SUBTOTAL			1255.	317.41	0.43	0.	14.47		90.4
TABLE ROCK	915.0	915.0	202.	27.40	0.	0.	0.	2758.	99.9
BULL SHOALS	662.0	650.4	323.	137.50	0.	0.	0.	13842.	83.3
SUBTOTAL			525.	164.90	0.	0.	0.		92.4
TOTAL			1718.	476.31	0.43	0.	14.47		91.1

RETURN OF BANKING AND/OR SPECIAL PURCHASES	0.
ADDITIONAL REQUIRED PURCHASES	0.
PURCHASES-AEC	-108.30
	368.01

ASSUMED CONDITIONS -- RUN 12 DATED 01-20-83
100.0 PERCENT MEDIAN INFLOW
70.0 PERCENT GUIDE CURVE USED THIS MONTH-14 RESERVOIR SYSTEM
0. PERCENT GUIDE CURVE USED THIS MONTH- 2 RESERVOIR SYSTEM
99.2 PERCENT FULL ON 2- 1-1983 (STARTING DATE)

Figure 5-16

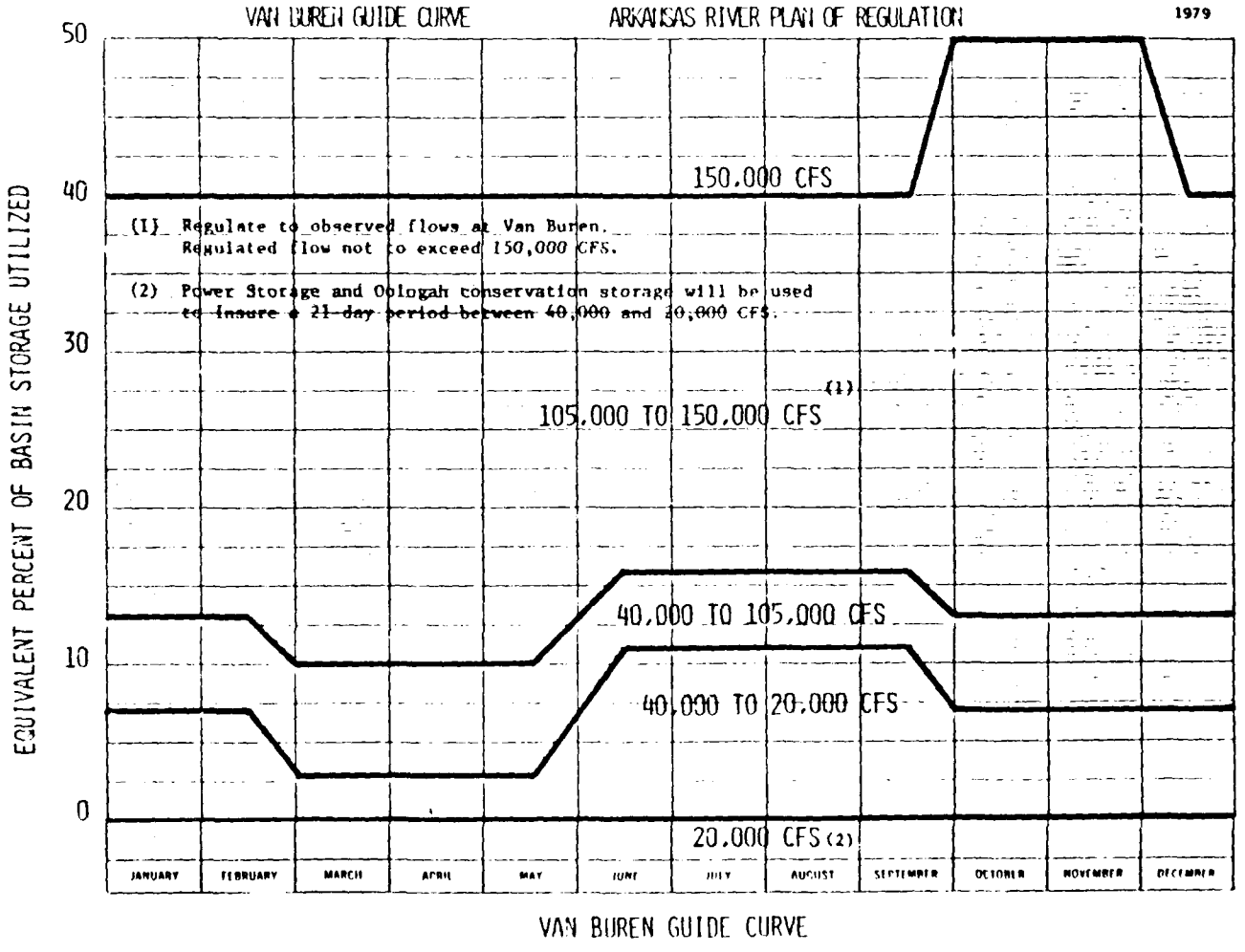

PLATE 4

Figure 5-17

DAILY LAKE REPORT

MON 4 OCT 82

LAKE	ELEV. (FT MSL)	NET STORAGE (AC FT)	POOL ELEVATION (MSL)	24 HR CHANGE (MSL)	STORAGE USED (FEET)	STORAGE USED (PERCENT)	24 HR AVERAGE (CFS) INFLOW	24 HR AVERAGE (CFS) OUTFLOW	(MSL) RELEASE	24 HR RAIN
WHITE RIVER BASIN										
			1113.18	-0.03	-6.8	-19	-148	175	20	0.10
			916.47	-0.04	-0.5	-1	399	1170	40	0.00
			656.43	0.06	-0.6	-2	1758	450	50	0.00
			543.84	-0.17	-8.2	-24	454	2205	3140	0.00
			515.97	0.20	21.2	13	275	1730	1720	0.08
			452.66	-0.01	-8.3	-35	296	220	40	0.20
ARKANSAS RIVER BASIN										
			6206.59	0.00	-23.4	-114	125	120	100	0.00
			3795.93	0.28	-55.1	-99	517	208	208	0.00
			1420.62	-0.01	-1.0	-6	30	0	0	0.00
			1325.26	-0.01	-13.7	-55	0	10	10	0.00
			1009.08	0.02	1.0	1	300	125	125	0.00
			1124.86	0.00	-0.1	-3	0	12	12	0.00
			720.79	0.03	-2.2	-16	450	0	0	0.00
			760.29	0.00	-1.2	-26	5	0	0	0.00
			901.21	-0.01	-1.5	-30	1	5	5	0.00
			948.08	-0.02	-1.4	-19	1	13	13	0.00
			793.54	-0.01	-0.5	-4	1	5	5	0.00
			840.19	-0.01	-17.8	-65	0	0	0	0.00
			636.97	-0.03	-1.0	-5	50	30	30	0.00
			731.88	-0.03	-1.1	-12	1	13	13	0.00
			676.30	-0.10	-33.7	-101	2	3	3	0.00
			748.76	-0.03	-1.7	-12	0	3	3	0.00
			620.80	0.00	-93.2	-103	10	10	10	0.00
			532.45	-0.04	0.5	0	200	257	70	0.00
			511.49	0.11	0.5	0	150	130	45	0.00
			1271.25	-0.01	-2.7	-17	1	5	5	0.00
			1349.35	-0.02	-1.1	-8	10	9	9	0.00
			1039.06	-0.02	-0.4	-4	75	37	37	0.00
			739.55	0.03	-5.4	-40	800	0	0	0.00
			618.62	-0.09	-0.4	-2	100	260	150	0.00
			553.90	-0.01	-0.1	-3	100	0	0	0.00
			489.65	0.00	-0.3	-12	900	1338	1200	0.00
			624.28	0.01	-7.7	-25	100	93	0	0.00
			4190.74	0.00	-10.3	-33	123	75	75	0.00
			2720.60	-0.10	-42.9	-105	0	0	0	0.00
			2002.90	0.00	-1.1	-14	0	2	2	0.00
			1614.54	-0.04	-0.9	-6	0	10	10	0.00
			580.39	0.03	0.4	1	800	50	50	0.00
			459.16	0.01	-0.8	-42	2500	444	0	0.00
			412.69	-0.03	-0.3	-31	1200	1250	1100	0.00
			477.45	0.00	-0.5	-6	0	25	25	0.00
			391.28	-0.40	-0.7	-72	461	1840	1700	0.00
			371.88	-0.10	-0.1	-6	1826	2040	1800	0.00
			336.78	0.04	-1.2	-62	1886	830	100	0.00
			384.26	-0.02	0.3	0	-14	8	8	0.07
			285.07	-0.32	-1.9	-65	1294	2040	1800	0.00
			265.09	0.01	0.1	0	2012	2040	1700	0.00
			342.03	-0.02	0.0	0	-2	5	5	0.00
			249.86	0.06	0.9	0	1688	1440	800	0.00
			231.07	-0.44	0.1	0	1254	1840	1600	0.00
			213.31	0.05	0.3	0	2066	2040	1900	0.00
			196.03	-0.26	0.0	0	1806	2540	2400	0.00
			182.28	0.08	0.3	0	2540	1640	2500	0.00
			162.35	0.01	0.4	0	1507	1340	1900	0.00

HYDROPOWER REPORT

LAKE & SYSTEM	INSTALLED CAPACITY (MW)	DAY SECOND FEET	DAY GWH	LAKE & SYSTEM	INSTALLED CAPACITY (MW)	DAY SECOND FEET	DAY GWH	LAKE & SYSTEM	INSTALLED CAPACITY (MW)	DAY SECOND FEET	DAY GWH
		140.	0.05			0.	0.00			1314.	0.24
		1090.	0.39			0.	0.00			6.	0.00
		290.	0.10			0.	0.00			2250.	0.25
		2150.	0.63			93.	0.02			0.	0.00
		190.	0.06			0.	0.00				
						0.	0.00				
						0.	0.00				
						500.	0.03				

U.C.

Figure 5-18

LITTLE ROCK DISTRICT
RESERVOIR REPORT FOR MON 4 OCT 82

RESERVOIR	POOL ELEV 0800	24-HOUR CHANGE A-F	STORAGE USED A-F	PERCENT	24-HOUR AVERAGE OUTFLOW	INFLOW	RAIN	
WHITE RIVER BASIN								
BEAVER	1113.18	-777.	-184638.	-20.	175.	-148.	0.10	1467262.
TABLE ROCK	916.47	-1760.	-23320.	-2.	1170.	399.	0.00	2765680.
BULL SHOALS	656.43	2820.	-26790.	-2.	450.	1759.	0.00	3159210.
NORFORK	543.84	-3382.	-170384.	-24.	2205.	454.	0.00	1080816.
GREERS FERRY	452.66	-290.	-252360.	-35.	220.	297.	0.20	1658140.
CLEARWATER	515.97	708.	53333.	14.	1730.	276.	0.08	76534.
ARKANSAS RIVER BASIN								
BLUE MOUNTAIN	384.26	-61.	796.	0.	8.	-14.	0.07	25436.
NIMROD	342.03	-71.	106.	0.	5.	-2.	0.00	29116.
<1								
LOCK & DAM 13	391.28	-2640.	-4752.	-72.	1840.	462.	0.00	54348.
OZARK	371.88	-970.	-1164.	-6.	2040.	1827.	0.00	147236.
DARDANELLE	336.78	1272.	-40496.	-62.	830.	1887.	0.00	445704.
LOCK & DAM 9	285.07	-1664.	-10336.	-65.	2040.	1295.	0.00	54264.
TOAD SUCK-L&D 8	265.09	43.	387.	0.	2040.	2013.	0.00	33387.
MURRAY -L&D 7	249.86	618.	8858.	0.	1440.	1688.	0.00	95958.
D.D TERRY-L&D 6	231.07	-2024.	322.	0.	1840.	1254.	0.00	49822.
LOCK & DAM 5	213.31	360.	2232.	0.	2040.	2067.	0.00	63532.
LOCK & DAM 4	196.03	-1716.	198.	0.	2540.	1806.	0.00	70598.
LOCK & DAM 3	182.28	320.	1120.	0.	1640.	2541.	0.00	47520.
LOCK & DAM 2	162.35	111.	3885.	0.	1340.	1507.	0.00	113985.
LITTLE RIVER BASIN								
DEQUEEN	427.37	-36.	-13792.	-54.	7.	-6.	0.00	21108.
GILLHAM	486.03	-17.	-17494.	-60.	20.	17.	0.00	15536.
DIERKS	523.53	-38.	-3232.	-21.	18.	0.	1.39	26418.
MILLWOOD	259.12	299.	-2389.	-2.	160.	697.	0.00	202753.

Figure 5-19

FORT WORTH DISTRICT CORPS OF ENGINEERS
RESERVOIR REPORT FOR MON 4 OCT 82

RESERVOIR	POOL ELEVATIONS FEET-MSL 0000	0800	MEAN INFLOW DSF	MEAN DAILY OUTFLOWS TURBINE DSF	PUMP MGD	TOTAL DSF	RAIN INCHES	EVAP	0800 RELEASE CFS	FLOOD POOL UTILIZED %	A-F
RED RIVER BASIN											
WRIGHT PATM	224.58	224.57	-135	0	59.020	593	0.00	.15	502		
BOB SANDLIN	0.00	328.46	-8	0	2.413	4	0.00	.15	0		
LAKE O PINE	228.77	228.76	-375	0	0.000	200	0.00	.15	200	1	4856
CADDO	0.00	168.00	113	0	0.000	0	0.00	.15	0		
SABINE RIVER BASIN											
TOLEDO BEND	168.27	168.27	258	30	0.000	174	0.00	.19	144		
NECHES RIVER BASIN											
SAM RAYBURN	159.93	159.92	361	2250	0.000	2250	0.00	.22	0		
B.A. STEINH	75.44	75.57	2500	0	0.000	2482	0.00	.11	2485		
TRINITY RIVER BASIN											
BRIDGEPORT	0.00	834.16	185	0	0.000	343	0.00	.26	343		
EAGLE MOUNT	0.00	646.65	306	0	0.000	241	0.00	.26	241		
LAKE WORTH	0.00	591.54	177	0	118.820	184	0.00	.26	0		
BENBROOK	692.99	692.99	-8	0	0.000	0	0.00	.26	0		
LEWISVILLE	514.89	514.87	-86	0	19.263	368	0.05	.18	337		
GRAPEVINE	534.56	534.56	32	0	0.000	30	0.05	.18	30		
LAVON	490.65	490.64	-21	0	137.885	213	0.00	.12	0		
RAY HUBBARD	434.27	434.25	189	0	0.000	0	0.00	.12	0		
CEDAR CREEK	0.00	319.71	26	0	83.870	130	0.00	.23	0		
NAVARRO MIL	422.67	422.66	1	0	6.157	16	0.00	.23	6		
BARDWELL	419.30	419.30	8	0	2.531	4	0.09	.21	0		
BRAZOS RIVER BASIN											
POSSUM KING	996.88	996.86	361	20	0.000	20	0.00	.22	20		
GRANBURY	692.25	692.25	107	0	1.812	5	0.00	.24	2		
WHITNEY	529.47	529.47	49	0	0.000	0	0.00	.25	0		
WACO	452.78	452.77	23	0	28.223	44	0.00	.24	0		
PROCTOR	1160.31	1160.31	8	0	0.000	25	0.00	.21	25		
BELTON	593.14	593.14	40	0	27.311	67	0.00	.27	25		
STILLHOUSE	620.71	620.71	0	0	0.000	0	0.00	.34	0		
GEORGETOWN	789.91	789.91	3	0	0.000	2	0.00	.19	2		
GRANGER	503.41	503.41	10	0	0.000	3	0.00	.23	3		
SOMERVILLE	236.42	236.42	-43	0	2.703	4	0.00	.19	0		
LIMESTONE	360.90	360.90	-41	0	0.000	2	0.00	.22	2		
COLORADO RIVER BASIN											
TWIN BUTTES	0.00	1921.46	0	0	0.000	0	0.00	.29	46		
O.C. FISHER	1884.15	1884.15	30	0	0.000	0	0.00	.29	0		
HORDS CREEK	1888.92	1888.92	0	0	0.300	0	0.00	.26	0		
BUCHANAN	0.00	1012.47	0	0	0.000	0	0.00	.00	0		
MARSHALL FO	665.16	665.14	238	381	0.000	381	0.00	.20	0		
GUADALUPE RIVER BASIN											
CANYON	906.15	906.14	96	0	0.000	80	0.00	.24	80		

Figure 5-20

STATIONS ABOVE FLOOD 13 JUL 82

STATION	FS	STG	CHNG
WHITE R. BSN.			
AUGUSTA	26	26.8	9.8

SWDED-X

DAILY RIVER REPORT 13 JUL 82

STATION	FS	STG	CHNG	DISCHG CFS
****** WHITE R. BSN.		******		
ST. JOE	33	3.9	-.0	140
CALICO ROCK	19	2.7	.4	2480
BATESVILLE	23	4.5	-.5	
BLACK ROCK	14	3.8	-.5	4710
NEWPORT	26	3.6	-1.0	9620
AUGUSTA	26	26.8	9.8	33800
GEORGETOWN				
CLARENDON	26	15.3	-1.0	16900
****** ARKANSAS R. BSN		******		
PUEBLO				
GARDEN CITY				
DODGE CITY				
WICHITA	19	2.5	"NA"	
BLACKWELL	26	3.2	-.4	
RALSTON	16	7.0	.1	13500
PERKINS	11	10.7	-.0	26400
TULSA				
****** VERDIGRIS R.		******		
ALTOONA	23	4.4	-.1	
FREDONIA	17	4.0	.1	
INDEPENDENCE	36	3.3	-.0	320
CLAREMORE	38	7.0	-1.6	2590
INOLA	42	25.4	"NA"	
****** GRAND-NEOSHO		******		
AMERICUS	33	3.5	.0	
FLORENCE	22	3.1	-.1	
PLYMOUTH	28	4.7	-.2	
IOLA	15	4.1	-.0	580
COMMERCE	15	3.6	-.8	
MUSKOGEE	35	17.9	"NA"	
POTEAU	20	3.6	.0	

Figure 5-21

***** SWD *****

**10/05/82 WEEKLY ENERGY REVISED **
**10/05/82 MONTHLY ENERGY REVISED **

***** L I T T L E R O C K D I S T R I C T *****

BV IS IN ZONE 3. TR AND BS ARE IN SEASONAL POOL ZONE. NF AND GF ARE IN ZONE 4. FISHWATER CRITERIA IS IN EFFECT AT ALL WHITE RIVER PROJECTS. CALICO ROCK TEMP. FORECAST - 89 84 82

***** T U L S A D I S T R I C T *****

BROKEN BOW, DENISON, AND KEYSTONE ARE IN ZONE 3...
TENKILLER AND EUFAULA ARE IN ZONE 4...
MAINTAINING MININUM FLOW BELOW BROKEN BOW AND TENKILLER....

***** F O R T W O R T H D I S T R I C T *****

SAM RAYBURN IS GENERATING 40 HOURS PER WEEK.
WHITNEY IS CURRENTLY ON FIRM GENERATION.

***** S W P A *****

NO NOTES AT THIS TIME

ENERGY DECLARATION AND GENERATION

MWH FOR MON.-- 4 OCT 1982

PROJECT	CARRY-OVER	THIS MONTH AVAILABLE	THIS MONTH GENERATED	THIS WEEK AVAILABLE	THIS WEEK GENERATED	GENER. YDA.	ALLOW. ELEV.	TODAYS ELEV.
BEAVER	0	10500	109	2700	1309	36	1107.3	1113.18
NORFORK	-2700	11200	1428	2400	2340	382	539.3	543.84
GREERS FERRY	5900	4100	413	900	1116	89	448.8	452.66
TABLE ROCK	0	31200	944	7300	1609	602	910.5	916.47
BULL SHOALS	0	47600	933	10500	2189	40	650.5	656.43
KEYSTONE	0	4900	269	900	807	-2	717.8	720.79
TENKILLER	0	1500	313	600	502	21	619.9	624.28
EUFAULA	1800	600	163	300	281	-3	577.4	580.39
DENISON	0	9000	889	4000	2148	238	612.2	615.15
BROKEN BOW	0	4000	-11	900	520	-4	583.5	589.55
SAM RAYBURN	0	8100	935	2000	2287	314	158.6	159.92
WHITNEY	300	2300	51	600	577	0	526.5	529.47
STORAGE PROJECT TOTALS		135000	6436					
FT. GIBSON		3900	51	100	121	-3		553.90
WEBBERS FALLS		0	-9	0	-22	-3		489.65
R. S. KERR		8100	109	1000	714	-7		459.16
OZARK (L&D 12)		0	0	0	0	0		371.88
DARDANELLE		9900	120	1400	1014	40		336.78
RUN-OF-RIVER TOTALS		21900	271					

TOTAL ALLOCATION 156900
TOTAL GENERATION 6707

Figure 5-22

NIMROD LAKE
MONTHLY RESERVOIR REPORT
JAN 82

DAY	POOL ELEVATIONS FT-MSL 0700	2400	STORAGE VOLUME AC-FT	RELEASES DSF POWER	TOTAL	EVAP DSF	MEAN INFLOW DSF	RAINFALL INCHES DAM	BSN
PRIOR MONTH		342.28	30004.						
1	342.28	342.27	29969.	0.	70.	5	80.	0.	0.
2	342.27	342.39	30394.	0.	70.	4	290.	0.	0.27
3	342.41	342.48	30714.	0.	70.	5	180.	1.13	0.64
4	342.48	342.46	30643.	0.	70.	4	150.	0.20	0.05
5	342.46	342.45	30608.	0.	120.	11	130.	0.	0.
6	342.44	342.41	30465.	0.	220.	6	120.	0.	0.
7	342.38	342.33	30182.	0.	220.	5	120.	0.	0.
8	342.32	342.27	29969.	0.	220.	5	100.	0.	0.
9	342.25	342.27	29969.	0.	220.	5	100.	0.	0.
10	342.25	342.18	29649.	0.	220.	5	100.	0.	0.
11	342.15	342.06	29223.	0.	220.	5	80.	0.	0.
12	342.03	342.07	29258.	0.	135.	5	160.	0.04	0.01
13	342.08	342.10	29365.	0.	80.	5	140.	0.30	0.21
14	342.10	342.10	29365.	0.	80.	5	120.	0.	0.02
15	342.10	342.12	29436.	0.	80.	5	120.	0.	0.
16	342.13	342.13	29472.	0.	80.	5	100.	0.	0.
17	342.13	342.13	29472.	0.	80.	5	100.	0.	0.
18	342.13	342.14	29507.	0.	80.	5	100.	0.	0.
19	342.15	342.17	29613.	0.	80.	5	100.	0.	0.
20	342.18	342.19	29684.	0.	80.	5	100.	0.	0.
21	342.20	342.24	29862.	0.	80.	5	180.	0.15	0.06
22	342.32	342.74	31637.	0.	80.	5	980.	0.70	0.99
23	342.94	343.62	35183.	0.	80.	6	1870.	1.40	0.48
24	344.00	344.58	39243.	0.	80.	6	2130.	0.	0.
25	344.82	344.28	37974.	0.	1922.	6	1290.	0.	0.
26	343.90	342.80	31850.	0.	3800.	5	800.	0.	0.
27	342.38	342.03	29116.	0.	2232.	5	700.	0.	0.
28	342.03	342.06	29223.	0.	473.	5	600.	0.	0.
29	342.12	342.22	29791.	0.	310.	5	600.	0.	0.
30	342.22	343.15	33195.	0.	315.	6	2004.	0.25	0.45
31	343.90	348.20	57680.	0.	145.	11	12497.	2.05	1.74
TOTAL				0.	12012.	177	26141.	6.22	4.92
MEANS	342.65			0.	387.	6.	843.		
MAX MN	348.20		57680.	0.	3800.	11	12497.		
MIN MN	342.03		29116.	0.	70.	4	80.		

INFLOW VOLUME FOR MONTH = 51851. ACRE FEET
WATER SUPPLY WITHDRAWAL FOR MONTH = 3. D.S.F.
UNACCOUNTED LOSSES FOR MONTH = -4. D.S.F.

Figure 5-23

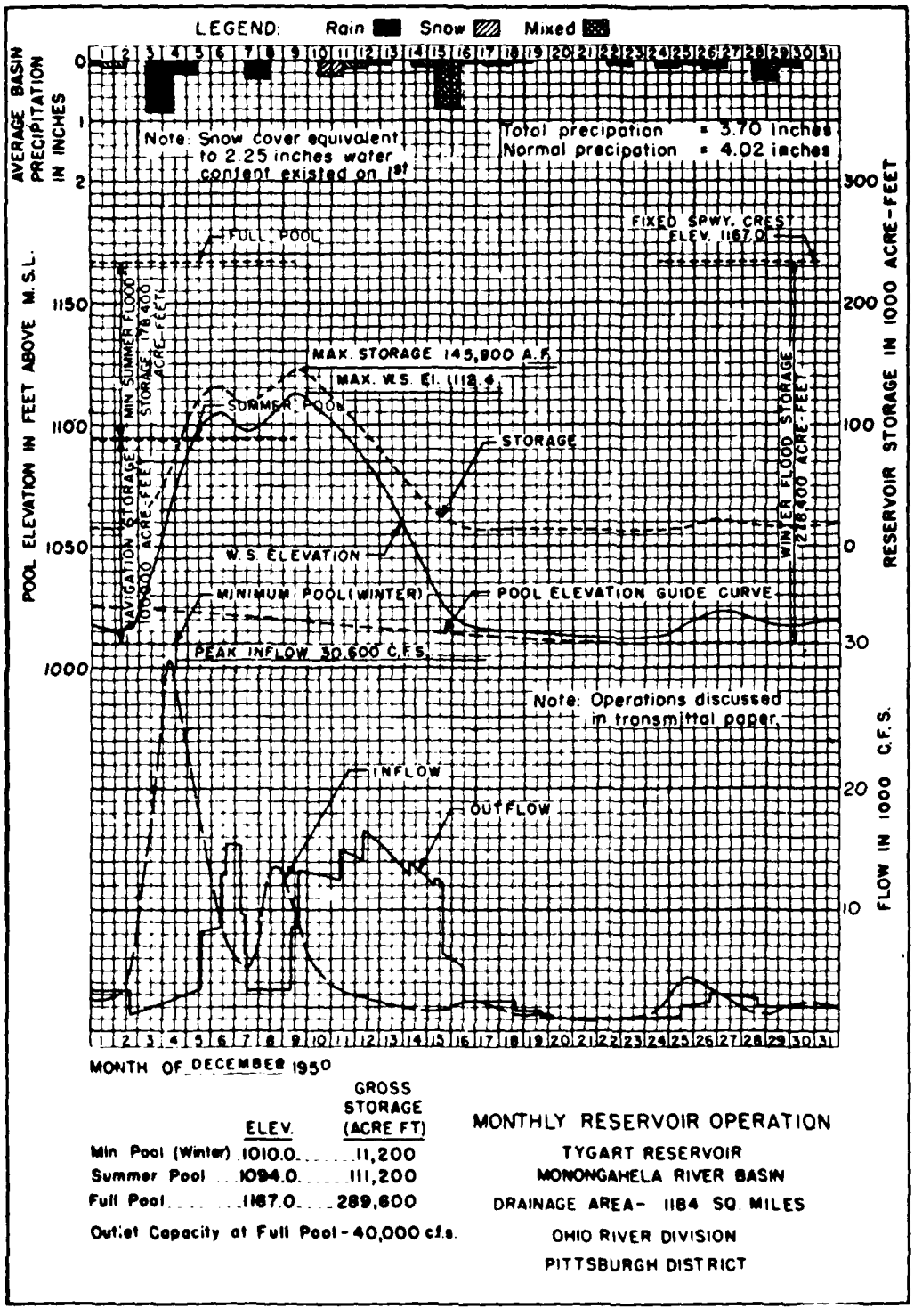

	ELEV.	GROSS STORAGE (ACRE FT)
Min Pool (Winter)	1010.0	11,200
Summer Pool	1094.0	111,200
Full Pool	1167.0	289,600

Outlet Capacity at Full Pool - 40,000 c.f.s.

MONTHLY RESERVOIR OPERATION

TYGART RESERVOIR
MONONGAHELA RIVER BASIN
DRAINAGE AREA- 1184 SQ. MILES
OHIO RIVER DIVISION
PITTSBURGH DISTRICT

Figure 5-24

DATE 01/25/83 PAGE 10 OF 12
SHEET 1

RIVER STAGES (FEET)

OCTOBER 1982

DATE	STATION (CODE SYMBOL USED FOR NAME)							
	SJOA4	CLRA4	BATA4	BKRA4	NPTA4	AUGA4	GEOA4	CRDA4
1	3.3	3.0	4.0	-	1.0	13.2	1.2	10.5
2	3.2	3.6	6.2	2.4	.6	13.2	1.1	10.3
3	3.2	3.0	6.5	2.4	2.1	13.0	-	10.2
4	3.2	3.2	6.0	2.5	2.2	13.8	1.0	10.1
5	3.3	5.3	6.0	2.5	1.7	1.4	1.0	10.0
6	-	7.1	8.0	2.5	1.7	13.8	1.5	10.2
7	-	7.3	10.8	6.6	5.0	14.5	2.9	11.0
8	-	4.6	9.0	5.1	7.4	17.7	3.2	11.5
9	2.3	1.9	7.8	3.6	6.4	19.2	3.9	12.3
10	2.2	1.4	5.0	4.7	4.2	18.2	5.9	13.4
11	-	1.2	-	4.6	2.7	16.4	5.3	14.0
12	2.4	2.3	4.0	4.0	1.9	15.1	5.2	13.9
13	2.5	5.8	4.0	4.2	1.4	14.4	2.5	13.1
14	2.4	2.7	6.2	4.0	1.3	14.6	-	12.1
15	2.4	4.0	5.2	3.8	2.9	15.0	1.2	11.3
16	2.4	4.5	5.5	3.6	2.3	14.5	1.0	10.7
17	2.4	2.2	5.5	3.5	2.2	14.5	1.0	10.5
18	2.4	2.3	5.5	3.3	2.2	14.4	1.8	10.5
19	2.3	4.3	5.5	3.3	1.8	14.1	1.9	10.6
20	3.3	1.3	6.0	3.2	1.6	13.8	1.9	10.6
21	3.3	3.1	5.5	3.0	2.2	13.8	1.3	10.4
22	3.3	3.8	5.5	2.9	1.7	13.9	1.3	10.3
23	3.2	2.9	5.5	2.9	1.7	13.7	1.2	10.2
24	3.2	3.2	5.5	2.8	1.6	13.7	1.3	10.2
25	3.2	3.0	5.5	2.8	1.5	-	1.3	10.2
26	3.2	1.8	5.5	2.8	1.4	13.5	-	10.1
27	3.2	2.6	4.8	2.8	1.2	13.5	1.9	10.0
28	3.2	5.5	7.0	2.8	.9	13.3	.5	9.9
29	3.3	3.0	7.9	2.9	1.6	13.0	.5	9.7
30	3.2	2.0	5.5	2.9	2.6	13.9	.5	9.6
31	3.3	6.8	5.0	2.9	2.0	14.2	1.3	9.6

NOTE: STAGES ARE 0700-HR READINGS

Figure 5-25

Example: Monthly Hydropower Report

DATE	KEYSTONE GWH
1 JAN	0.10
2	0.30
3	0.28
4	0.18
29	0.42
30	0.13
31	0.68
TOTAL	7.68

MAX DAY 31 0.68 GWH
MIN DAY 15 0.0 GWH

FIGURE 5-1

MONTHLY SUMMARY OF BUFFER ZONE OPERATION

BEAVER

NOV 82

TOP OF CONSERVATION POOL-1120.00

	POOL ELEVATION AT 0000 HRS					RELEASE DSF	
	CONS.	ZONE A		ZONE B	FLOOD		
AY	ELEV.	ELEV.	LIMIT	ELEV.	LIMIT	ELEV.	POWER	SPILL
1	1110.89		1121.00		1121.00		287C.	0.
2	1110.73		1121.00		1121.00		51C.	0.
3	1110.69		1121.00		1121.00		18C.	0.
4	1110.65		1121.00		1121.00		13C.	0.
5	1110.60		1121.00		1121.00		2C.	0.
6	1110.57		1121.00		1121.00		2C.	0.
7	1110.53		1121.00		1121.00		2C.	0.
8	1110.59		1121.00		1121.00		19C.	0.
9	1110.61		1121.00		1121.00		2C.	0.
10	1110.62		1121.00		1121.00		2C.	0.
11	1110.63		1121.00		1121.00		2C.	0.
12	1110.65		1121.00		1121.00		2C.	0.
13	1110.60		1121.00		1121.00		2C.	0.
14	1110.58		1121.00		1121.00		2C.	0.
15	1110.54		1121.00		1121.00		112C.	0.
16	1110.46		1121.00		1121.00		98C.	0.
17	1110.38		1121.00		1121.00		35C.	0.
18	1110.34		1121.00		1121.00		12C.	0.
19	1110.36		1121.00		1121.00		2C.	0.
20	1110.40		1121.00		1121.00		2C.	0.
21	1110.39		1121.00		1121.00		2C.	0.
22	1110.39		1121.00		1121.00		2C.	0.
23	1110.57		1121.00		1121.00		2C.	0.
24	1110.57		1121.00		1121.00		2C.	0.
25	1110.62		1121.00		1121.00		2C.	0.
26	1110.66		1121.00		1121.00		2C.	0.
27	1110.85		1121.00		1121.00		2C.	0.
28	1111.40		1121.00		1121.00		2C.	0.
29	1111.93		1121.00		1121.00		2C.	0.
30	1112.22		1121.00		1121.00		2C.	0.
						SUB-TOTAL	687C.	0.
						TOTAL RELEASE		687C.

FIGURE B-27

RED RIVER BASIN

DEQUEEN LAKE	OCT	NOV	DEC	JAN	FEB	MAR	APR	MAY	JUN	JUL	AUG	SEP	TOTAL
Inflows (1,000 AC. FT.)													
Avg 1930 thru 1981	5.9	13.0	20.6	24.6	24.6	30.2	29.5	29.4	11.0	5.4	4.0	6.4	204.4
WY 1981	6.3	5.8	20.4	1.6	15.7	21.3	9.7	32.2	51.7	9.6	4.0	2.3	180.6
Releases (1,000 AC. FT.)													
Avg 1979 thru 1981	8.6	10.2	18.5	17.0	16.2	26.0	32.6	27.8	34.1	6.2	9.4	1.4	208.0
WY 1981	24.2	6.2	20.2	1.4	14.4	22.2	8.7	26.3	54.6	9.1	3.4	1.6	192.3
Basin Rainfall (inches)													
Avg 1930 thru 1981	3.8	4.2	4.1	3.8	3.8	4.9	5.4	6.3	4.2	4.3	3.4	4.4	52.6
WY 1981	3.1	2.4	3.1	0.5	3.0	3.6	2.8	8.6	6.9	6.2	4.1	3.6	47.9
Deviation	-0.7	-1.8	-1.0	-3.3	-0.8	-1.3	-2.6	+2.3	+2.7	+1.9	+0.7	-0.8	-4.7
Pool Elevation													
End of Month	437.35	436.98	437.03	437.11	437.77	437.04	437.33	440.45	436.98	436.87	436.88	437.00	
Maximum	446.93	437.52	444.26	437.16	440.36	440.58	438.14	440.96	455.29	438.98	437.63	437.24	
Minimum	435.88	436.98	436.85	437.03	437.09	436.98	436.57	437.29	436.94	436.81	436.78	436.86	
Pool Content EOM (1,000 AC. FT.)	35.5	34.9	35.0	35.1	36.2	35.0	35.5	41.0	34.9	34.7	34.7	34.9	

GILLHAM LAKE	OCT	NOV	DEC	JAN	FEB	MAR	APR	MAY	JUN	JUL	AUG	SEP	TOTAL
Inflows (1,000 AC. FT.)													
Avg 1930 thru 1981	11.5	23.5	38.1	47.3	43.6	55.6	49.9	51.2	19.8	10.4	5.2	10.1	365.9
WY 1981	8.8	7.1	33.1	2.7	5.6	40.6	32.8	56.7	70.8	32.0	7.9	2.1	300.2
Releases (1,000 AC. FT.)													
Avg 1977 thru 1981	5.0	14.5	29.2	28.0	25.3	60.3	76.9	47.9	36.8	9.2	10.7	3.3	347.1
WY 1981	15.6	7.7	33.2	3.3	22.0	43.0	35.1	46.8	79.9	28.4	10.8	2.8	328.6
Basin Rainfall (inches)													
Avg 1930 thru 1981	3.9	4.4	4.2	3.9	4.0	5.1	5.4	6.3	4.6	4.4	3.4	4.6	54.2
WY 1981	4.4	2.4	3.4	0.8	3.4	3.9	3.1	9.0	6.8	9.4	3.2	1.5	51.3
Deviation	+0.5	-2.0	-0.8	-3.1	-0.6	-1.2	-2.3	+2.7	+2.2	+5.0	-0.2	-2.9	-2.9
Pool Elevation													
End of Month	502.68	502.13	502.00	501.46	505.93	504.10	502.17	508.56	502.00	504.14	501.79	500.98	
Maximum	507.[illegible]	502.68	515.07	502.00	508.12	512.65	509.23	509.72	529.19	510.99	504.52	501.87	
Minimum	501.[illegible]	502.00	501.69	501.44	501.46	502.08	501.96	502.16	502.00	502.00	501.79	500.98	
Pool Content EOM (1,000 AC. FT.)	34.0	33.2	33.0	32.3	38.7	36.0	33.3	42.8	33.0	36.0	32.7	31.7	

EUFAULA RESERVOIR

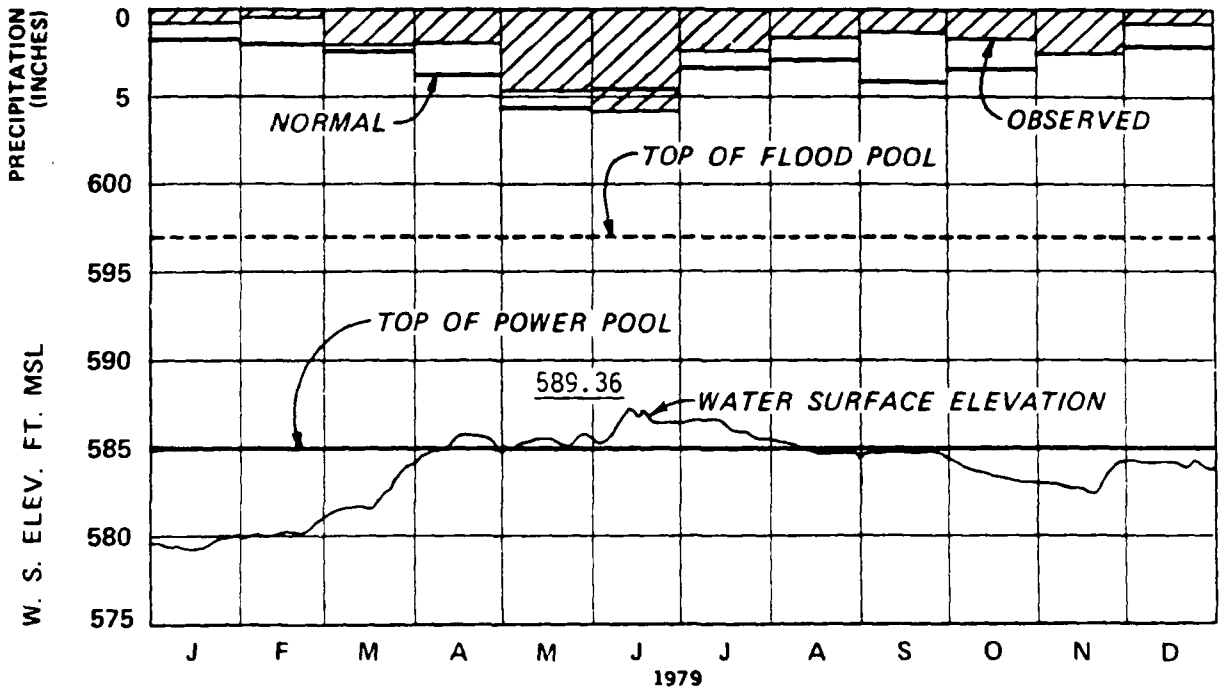

WISTER RESERVOIR

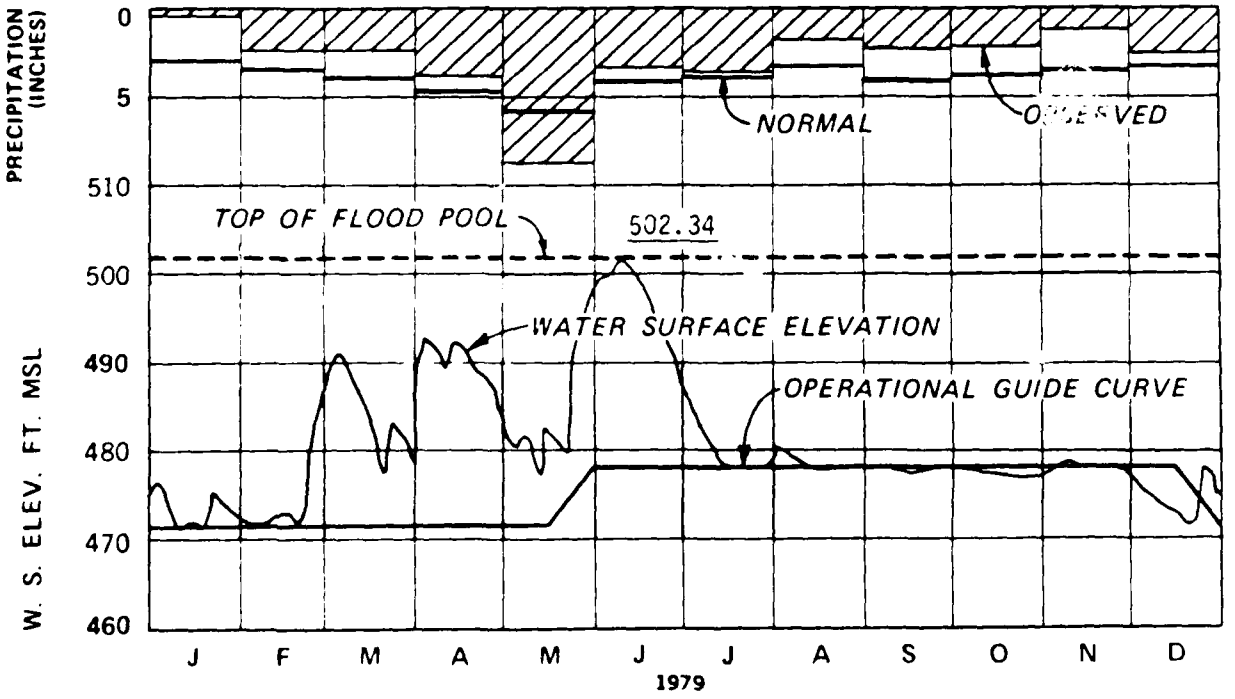

Figure 5-29

08082000 SALT FORK BRAZOS RIVER NEAR ASPERMONT, TX
(National stream-quality accounting network)

LOCATION.--Lat 33°20'02", long 100°14'16", Stonewall County, Hydrologic Unit 12050007, on left bank at downstream side of bridge on U.S. Highway 83, 5.5 mi (8.8 km) downstream from Salt Croton Creek, 13.2 mi (21.2 km) north of Aspermont, and at mile 27.3 (43.9 km) measured from confluence with Double Mountain Fork Brazos River which is at mile 923.2 (1 485.4 km) on the Brazos River.

DRAINAGE AREA.--5,130 mi² (13,287 km²), of which 2,634 mi² (6,822 km²) probably is noncontributing.

WATER-DISCHARGE RECORDS

PERIOD OF RECORD.--December 1923 to August 1925, June 1939 to current year.

REVISED RECORDS.--WDR TX-76-2: Drainage area.

GAGE.--Water-stage recorder and crest-stage gage. Datum of gage is 1,588.70 ft (484.236 m) National Geodetic Vertical Datum of 1929. Dec. 5, 1923, to Aug. 29, 1925, nonrecording gage at site 6.7 mi (10.8 km) downstream at different datum. June 15, 1939, to July 13, 1972, water-stage recorder at present site. July 14, 1972, to July 14, 1975, at site 0.1 mi (0.2 km) upstream at same datum.

REMARKS.--Water-discharge records fair. No large diversion above station. Some regulation by White River Reservoir, capacity 44 900 acre-ft (55.4 hm³), 106 mi (171 km) upstream. For statement regarding regulation by Soil Conservation Service floodwater-retarding structures, see station 08080950.

AVERAGE DISCHARGE.--41 years (water years 1940-80), 111 ft³/s (3.144 m³/s), 80,420 acre-ft/yr (99.2 hm³/yr).

EXTREMES FOR PERIOD OF RECORD.--Maximum discharge, 52 200 ft³/s (1 480 m³/s) Sept. 25, 1955, gage height, 14.92 ft (4.548 m), from rating curve extended above 29,000 ft³/s (821 m³/s), no flow at times most years. Maximum stage since at least 1900, that of Sept. 25, 1955.

EXTREMES OUTSIDE PERIOD OF RECORD.--Flood in December 1913 reached a stage of 14.4 ft (4.39 m), and flood in November 1934 reached a stage of 13.7 ft (4.18 m), from information by local residents.

EXTREMES FOR CURRENT YEAR.--Maximum discharge, 8,670 ft³/s (246 m³/s) May 15 at 2300 hours, gage height, 7.59 ft (2.313 m), no peak above base of 12 000 ft³/s (340 m³/s). Minimum daily, 0.03 ft³/s (0.001 m³/s) for many days.

DISCHARGE, IN CUBIC FEET PER SECOND, WATER YEAR OCTOBER 1979 TO SEPTEMBER 1980
MEAN VALUES

DAY	OCT	NOV	DEC	JAN	FEB	MAR	APR	MAY	JUN	JUL	AUG	SEP
1	.13	.07	.76	2.6	5.7	2.7	1.4	.64	232	.26	.13	.03
2	.11	.08	1.4	2.6	5.9	2.9	1.2	.53	559	.25	.09	.03
3	.11	.09	1.0	2.4	4.6	3.3	.86	6.2	122	.20	.08	.03
4	.09	.11	.89	2.3	4.2	3.9	.88	3.[illegible]	95	.10	.09	.03
5	.07	.11	.89	2.3	4.0	3.1	.83	4.0	81	.10	.05	.04
6	.07	.10	1.0	2.3	3.6	2.9	.58	1.7	68	.09	.04	.03
7	.07	.11	1.0	2.0	4.0	2.6	.36	1.1	60	.08	.04	.03
8	.06	.15	1.0	2.1	11	2.4	.26	.87	137	.07	.04	.04
9	.05	.12	1.0	1.7	42	2.3	.19	.47	336	.06	.03	2.1
10	.05	.16	1.0	1.7	19	1.9	.22	.30	120	.10	.04	8.5
11	.04	.20	1.4	1.5	15	2.2	.20	.26	350	.09	.04	1.0
12	.04	.18	1.8	1.4	18	2.0	.17	.24	860	.05	.03	.17
13	.04	.14	20	1.2	18	1.5	.15	.33	375	.05	.04	12
14	.05	.16	12	1.1	15	1.5	.13	.67	205	.05	.04	9.7
15	.04	.16	10	.92	14	1.3	.12	4080	121	.05	.04	1.8
16	.04	.15	7.8	.9	12	1.4	.11	1690	74	.04	.04	.35
17	.04	.17	4.9	.85	9.3	1.1	.10	523	51	.04	.12	.21
18	.04	.19	3.6	1.8	9.2	.99	.11	295	36	.04	.32	.18
19	.03	.19	2.9	3.9	7.8	1.0	.11	193	28	.05	.07	.17
20	.03	308	2.8	5.9	4.9	.85	.11	152	24	.05	.04	.13
21	.04	178	2.5	10	4.4	.67	.11	126	17	.06	.06	.11
22	.04	68	2.1	16	3.6	.90	.09	93	13	12	.03	.11
23	.04	17	2.5	22	2.9	.79	.10	79	8.7	25	.04	.24
24	.04	4.1	3.2	14	2.9	.65	.06	65	5.3	2.8	.04	.21
25	.04	3.0	3.7	9.8	2.9	.74	.06	55	3.4	1.7	.03	26
26	.05	1.9	3.6	9.2	2.9	.74	.09	46	2.0	1.4	.03	188
27	.05	1.9	3.2	7.8	3.2	1.3	.05	41	[illegible]	.90	.03	1080
28	.06	1.0	7.1	6.9	2.9	2.5	.03	38	.66	.63	.10	1740
29	.07	1.0	4.4	6.5	3.0	2.7	.04	309	.56	.42	.08	955
30	.09	.89	2.9	6.5	---	1.8	.04	429	.39	.30	.04	311
31	.10	---	2.7	6.0	---	1.9	---	336	---	.21	.04	---
TOTAL	1.82	587.43	115.04	156.16	255.9	56.44	8.75	8589.98	3366.[illegible]	47.24	1.93	4337.24
MEAN	.059	19.6	3.71	5.04	8.82	1.82	.29	277	112	1.52	.062	145
MAX	.13	308	20	22	42	3.9	1.4	4080	860	25	.32	1740
MIN	.03	.07	.76	.85	2.9	.65	.03	.04	.39	.04	.03	.03
AC-FT	3.6	1170	228	310	508	112	17	17040	6680	94	3.8	8600

CAL YR 1979 TOTAL 12784.95 MEAN 35.0 MAX 965 MIN .03 AC-FT 25360
WTR YR 1980 TOTAL 17524.04 MEAN 47.9 MAX 4080 MIN .03 AC-FT 34760

Figure 5-30

STATUS OF WATER CONTROL MANUALS IN SWD
(Report Control Symbol DAEN-CWE-16)

Revised: 1 January 1983

RESERVOIR	STREAM	OWNER	DIST	WATER CONTROL MANUAL SUBMITTED	SCHEDULED THRU FY 85	APPROVED
White Riv Master		CE	LRD	Dec 54 F		Dec 55 OCE
Beaver	White Riv Basin	CE	LRD	Oct 66 F		Jan 67 OCE
Table Rock	White Riv Basin	CE	LRD	Oct 66 F		Jan 67 OCE
Bull Shoals	White Riv Basin	CE	LRD	Oct 66 F		Jan 67 OCE
Norfork	White Riv Basin	CE	LRD	Oct 66 F		Jan 67 OCE
Clearwater	Black River	CE	LRD	Jan 73 U	Oct 83 R	Feb 73 SWD R*
Greers Ferry	Little Red River	CE	LRD	Oct 65 F		Jun 66 OCE
Arkansas Master		CE	AD	Apr 69 F		Jun 70 OCE
Pueblo (1)	Arkansas River	BR	AD	Dec 77 F		Feb 79 SWD
Trinidad	Purgatorie River	CE	AD	Jul 78 F		Oct 79 SWD
John Martin	Arkansas River	CE	AD	Nov 82 U	Feb 83 R	Jan 83 SWD AR
Arkansas Master		CE	TD	Apr 76 U		Sep 80 SWD
Cheney (1)	N. F. Ninnescah	BR	TD	Oct 65		Mar 66 OCE AR
El Dorado	Walnut River	CE	TD	Feb 81		Mar 82 SWD AR
Kaw	Arkansas River	CE	TD	Dec 77 F		Jan 78 SWD
Great Salt Plains	Salt Fork Ark	CE	TD	Nov 66 F		Apr 67 OCE
Keystone	Arkansas River	CE	TD	Nov 63	Sep 85 U	Apr 65 OCE
Heyburn	Polecat Creek	CE	TD	Jan 57	Jan 84 R	Feb 62 OCE AR
Verdigris System						
Toronto	Verdigris River	CE	TD	Jun 66 F	Jan 84 U	Aug 66 OCE
Fall River	Fall River	CE	TD	Jun 66 F	Aug 85 U	Aug 66 OCE
Elk City	Elk River	CE	TD	Jun 66 F		Aug 66 OCE
Big Hill	Big Hill Creek	CE	TD	Aug 82		Sep 82 SWD AR
Oologah	Verdigris River	CE	TD	Dec 75 U		Jan 76 SWD AR
Hulah	Caney River	CE	TD	Oct 68		Jun 69 OCE AR
Copan	Caney River	CE	TD	Nov 82	Feb 83	Dec 82 SWD R
Birch	Bird Creek	CE	TD	Aug 81 F		Sep 81 SWD
Skiatook	Homing Creek	[illegible]	TD		[illegible]	

Page 1 of [illegible]

Figure 5-21

PLATE 22

Figure 5-32

AVERAGE MONTHLY RECORDED FLOWS
ARKANSAS RIVER AT DAM No. 13, NEAR VAN BUREN, ARKANSAS

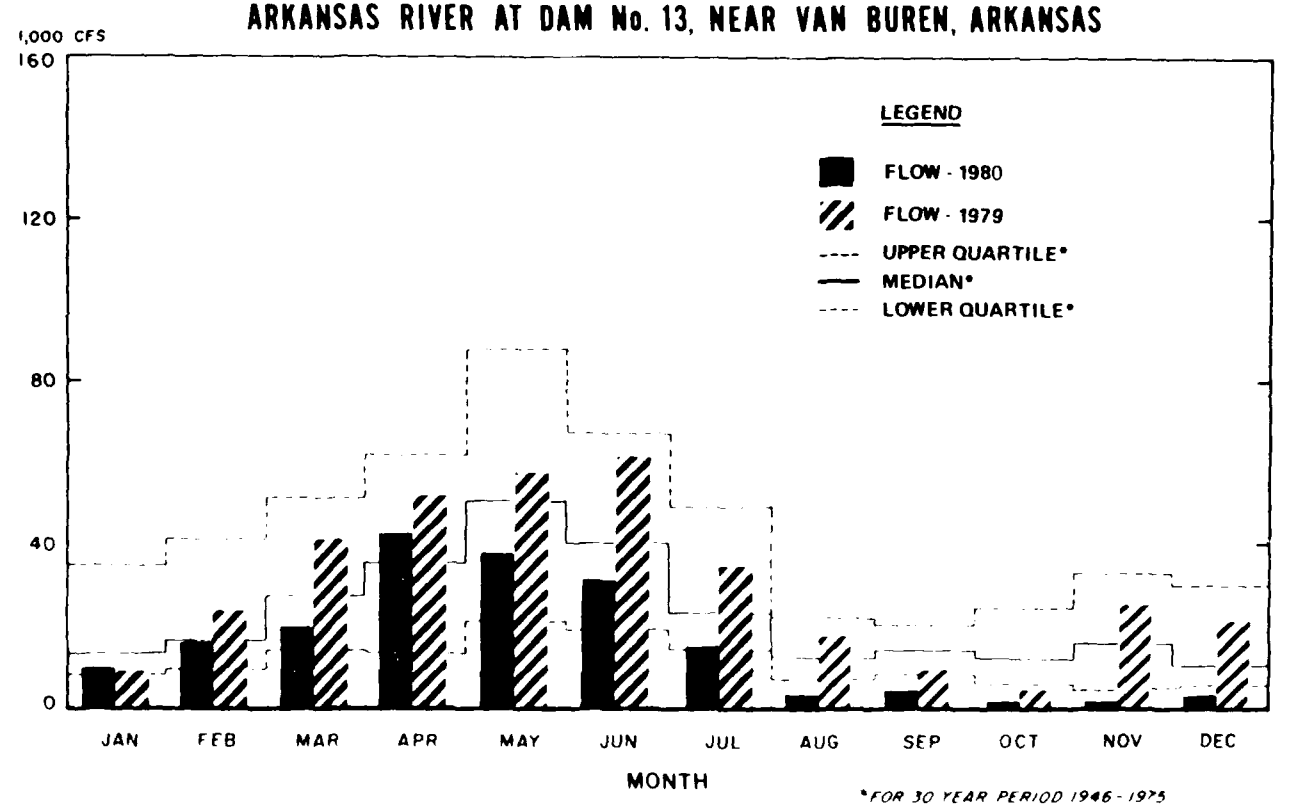

PLATE 6

Figure 5-22

7. TABULATION OF STREAM GAGE DATA

DATE 31 MAR 80

STREAM GAGE		STAGE ZERO DAMAGE	STAGE TODAY	NWS PREDICTED TEND (1)	NWS PREDICTED CREST - DATE	RECORD STAGE - DATE
LITTLE ARKANSAS RIVER, KANS. - TRIB. OF ARKANSAS RIVER						
SEDGWICK	KS 18	22.0		22.4	9PM 30	25.50 JUL 1904
NINNESCAH RIVER, KANS. - TRIB. OF ARKANSAS RIV						
PECK	KS 12	9.78				26.40 JUN 1923
GRAND-NEOSHO RIV, KANS., OKLA. - TRIB OF ARKANSAS RIV						
LEROY	KS 23	23.0		23.0	7AM 30	34.55 JUL 1951
IOLA	KS 19	23.49		25.0	AM 31	43.00 JUL 1951
CHANUTE	KS 24	NR		29.0	AM 31	40.90 JUL 1951
PARSONS	KS 19	20.52				40.20 JUL 1951
OSWEGO	KS 17	NR		20.0	PM 31	32.50 JUL 1951
COMMERCE	OK 15	17.8		18.5	AM 01	34.03 JUL 1951
COTTONWOOD RIV, KANS. - TRIB OF GRAND RIV						
PLYMOUTH	KS 28	31.74	F	32.43	4PM 30	37.80 JUL 1951
EMPORIA	KS 20	20.5	F	FALL BELOW FS	PM 01	33.40 JUL 1951

PAGE 4 UNCLAS

8. TABULATION OF RESERVOIR DATA DATE 31 MAR 80

RESERVOIR - STREAM	AVERAGE C.F.S. PAST 12 HRS.		POOL ELEVATION				PERCENT OF FLOOD CONTROL UTILIZED	
	INFLOW	OUTFLOW	NORMAL	TODAY	TEN (1)	CREST	TODAY	CREST
CHENEY-N.F. NINNESCAH R		800	1421.6	1423.53	R	1424.3	6	32
TORONTO-VERDIGRIS R	11000	100	901.5	915 90		918.0	33	34
FALL RIVER - FALL R	8200	75	948.5	958.48		962.0	14	21
ELK CITY - ELK R	6900	26	794.0	800.68		802.0	10	16
OOLOGAH-VERDIGRIS R	19000	5350	638.0	641.36		643.0	11	16
COUNCIL GROVE-GRAND R	4000	4	1270.0	1278.22	R	1280.5	36	47
MARION-COTTONWOOD R	2400	35	1350.5	1352.71	R	1353.0	23	27
JOHN REDMOND-GRAND R	20000	70	1036.0	1047.58	R	1053.0	22	36
PENSACOLA-GRAND R	34000	10900	745.0	738.48	R	742.5	0	0
LAKE HUDSON-GRAND R	16000	14000	619.0	620.25	F	620.37	5	5
FORT GIBSON-GRAND R	19500	15200	554.0	556.40	R	556.5	5	5

/1/ R - RISING F - FALLING S - STEADY

BT

Figure 5-35

EL DORADO LAKE

WATER SUPPLY STORAGE ACCOUNTING

TOTAL CONSERVATION STORAGE	154,100 A.F.
CONTRACTED STORAGE USER #1	31,900 A.F.
CONTRACTED STORAGE USER #2	33,450 A.F.
CONTRACTED STORAGE USER #3	88,750 A.F.

Month	User	Beginning Storage A.F.	Inflow Share A.F.	Total Losses A.F.	Withdrawn A.F.	Ending Storage A.F.
Jan	Lake	154,100	90	331	972	152,887
	1	31,900	19	68	476	31,374
	2	33,450	20	72	496	32,902
	3	88,750	52	191	0	88,611
Feb	Lake	152,887	230	789	878	151,450
	1	31,374	48	161	430	30,831
	2	32,902	50	169	448	32,335
	3	88,611	132	459	0	88,284
Mar	Lake	151,450	80	1,235	972	149,323
	1	30,831	17	250	476	30,121
	2	32,335	17	262	496	31,594
	3	88,284	46	722	0	87,608
Apr	Lake	149,323	70	1,825	941	146,627
	1	30,121	14	366	461	29,308
	2	31,594	15	384	480	30,744
	3	87,608	40	1,074	0	86,575
May	Lake	146,627				

ARKANSAS RIVER WATERSHED WALNUT RIVER KANSAS

EL DORADO LAKE

WATER SUPPLY
STORAGE ACCOUNTING

DEPT. OF THE ARMY TULSA DIST CORPS OF ENG 1981
DRAWN D.V.B
CHECKED D.E.B

Figure 5-36

Example: Hydropower Project Inflow Forecasts

TO: SWPA DATE: 1/20/83 TIME: 0950

PROJECT	INFLOW YDA	INFLOW FORECAST				
		20	21	22	23	24
Beaver	100	100	100	100	100	100
Table Rock	800	800				
Bull Shoals		1500	1400	1300	1200	100
Norfork						
Greers Ferry	500	400	300	200	200	100
Ozark		16000	14000	12000	12000	
Dardanelle						
Calico-Rock						
Temp						
	*** MEAN DAILY DISCHARGE ***					
Ozark						
Dardanelle						

FIGURE [illegible]

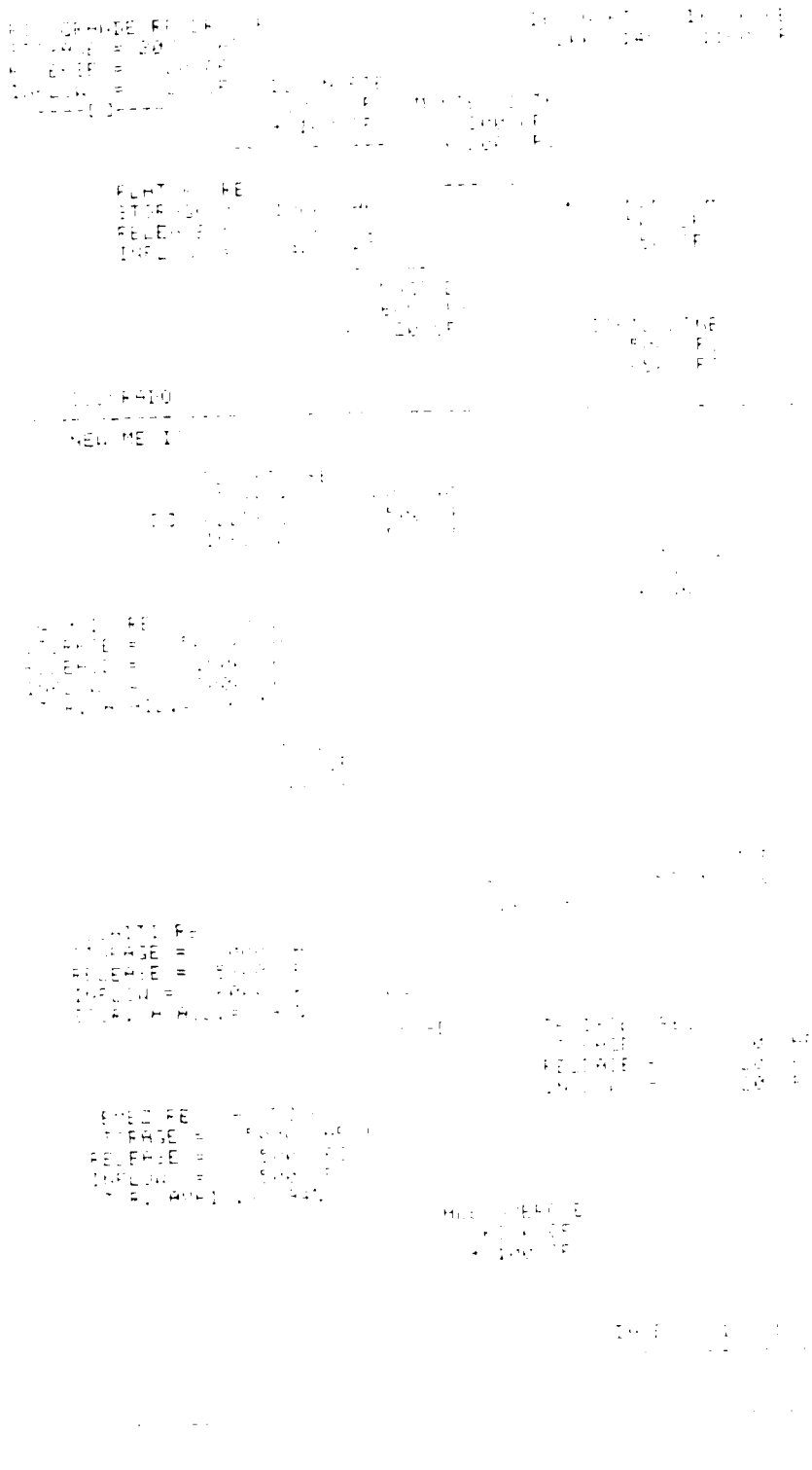

Figure 5-38

FORT WORTH DISTRICT CORPS OF ENGINEERS
RESERVOIR REPORT FOR TUE 26 OCT 82

RESERVOIR	POOL ELEV 0600	24-HOUR CHANGE A-F	STORAGE USED A-F	PERCENT	24-HOUR AVERAGE OUTFLOW	INFLOW	RAIN	
RED RIVER BASIN								
WRIGHT PATMAN	223.53	-2898.	39053.	2.	889.	-252.	0.00	227810.
BOB SANDLIN	328.20	-74.	-8211.	-39.	6.	-0.	0.00	135152.
LAKE O PINES	228.54	0.	-747.	0.	25.	64.	0.00	255684.
CADDO	166.30	0.	-5340.	-4.	0.	54.	0.00	123610.
SABINE RIVER BASIN								
TOLEDO BEND	168.22	-8245.	-651772.	-15.	1399.	-5313.	0.00	3825182.
NECHES RIVER BASIN								
SAM RAYBURN	159.44	-9113.	-534670.	-37.	2696.	-1813.	0.00	2363839.
B.A. STEINHAGEN	68.53	4534.	-89215.	-95.	1632.	1009.	0.00	5135.
TRINITY RIVER BASIN								
BRIDGEPORT	833.24	-738.	-34737.	-9.	341.	26.	0.00	351832.
EAGLE MOUNTAIN	646.62	-168.	-20965.	-11.	163.	118.	0.00	168557.
LAKE WORTH	591.76	-128.	-8317.	-22.	101.	56.	0.00	29831.
BENBROOK	692.67	-73.	-4923.	-7.	8.	-11.	0.00	83324.
LEWISVILLE	513.86	-666.	-26026.	-6.	214.	-36.	0.00	431585.
GRAPEVINE	534.10	-216.	-6492.	-4.	30.	-52.	0.00	174617.
LAVON	490.23	-407.	-36720.	-8.	141.	121.	0.00	420108.
RAY HUBBARD	434.27	-443.	-27532.	-6.	0.	-244.	0.00	462471.
CEDAR CREEK	329.36	-318.	-87141.	-13.	105.	75.	0.00	592274.
NAVARRO MILLS	422.26	-137.	-10778.	-19.	13.	-37.	0.00	46211.
BARDWELL	419.05	-68.	-6729.	-13.	3.	-17.	0.00	45562.
BRAZOS RIVER BASIN								
POSSUM KINGDOM	996.70	0.	-55216.	-12.	20.	11.	0.00	515183.
GRANBURY	692.24	-65.	-6452.	-4.	4.	41.	0.00	147033.
WHITNEY	528.49	-206.	-99850.	-26.	634.	-114.	0.00	527242.
WACO	452.26	-207.	-19281.	-14.	36.	-36.	0.00	129907.
PROCTOR	1259.92	-121.	-9092.	-18.	3.	-37.	0.00	50301.
BELTON	592.68	-241.	-16156.	-4.	49.	-20.	0.00	425827.
STILLHOUSE HOLL	620.40	-125.	-10134.	-4.	0.	-41.	0.00	225569.
GEORGETOWN	789.66	-25.	-1715.	-6.	2.	-8.	0.00	35367.
GRANGER	503.32	-42.	-2887.	-8.	3.	-7.	0.00	62620.
SOMERVILLE	236.46	-107.	-16999.	-11.	3.	-32.	0.00	143111.
LIMESTONE	360.82	-249.	-28630.	-14.	2.	-146.	0.00	196810.
COLORADO RIVER BASIN								
TWIN BUTTES	1920.79	0.	0.	0.	0.	0.	0.00	0.
O.C. FISHER	1883.74	-43.	-84595.	-106.	0.	-3.	0.00	31148.
HORDS CREEK	1688.46	-3.	-4392.	-17.	0.	1.	0.00	3720.
BUCHANAN	1012.15	0.	0.	0.	0.	0.	0.00	0.
MARSHALL FORD	664.95	153.	-273715.	-33.	184.	274.	0.00	897872.
GUADALUPE RIVER BASIN								
CANYON	909.89	-157.	-25062.	-7.	80.	80.	0.00	356937.

PUMPAGE BELOW DAM (MGD): GRAPEVINE , PROCTOR , AND BELTON . TOTAL OUTFLOW INCLUDES THIS AND PUMPAGE TABULATED.
PRELIMINARY DATA--INFLOW NOT ADJUSTED FOR WIND EFFECT, ETC.

Figure 5-39

DIVERSIONS IN ACRE-FEET FOR WATER YEAR
1 OCTOBER 1978 TO 30 SEPTEMBER 1979

	Grapevine Lake City of:	Navarro Mills Lake City of:			Bardwell Lake City of:
	Grapevine	Corsicana	Post Oak	Dawson	Ennis
OCT	148	566	28	6	185
NOV	110	467	24	8	138
DEC	103	439	28	16	142
JAN	108	503	21	12	181
FEB	165	409	25	9	145
MAR	106	442	14	10	129
APR	111	433	26	10	136
MAY	141	465	16	9	145
JUN	194	516	35	8	169
JUL	215	572	43	8	169
AUG	170	571	46	8	185
SEP	204	549	42	8	187

Figure 5-40

RELEASES FROM LEWISVILLE AND GRAPEVINE RESERVOIRS
(Acre-Feet)

1979	Request for Releases by the City of Dallas from		Total Releases (1) from		Pumpage by City of Denton	Lewisville	Grapevine
	Lewisville	Grapevine	Lewisville	Grapevine	Lewisville		Grapevine
Jan	4313	1950	4362	2807	624	242	108
Feb	3339	1844	3297	2388	565	221	108
Mar	8350	620	8289	1430	579	267	106
Apr	9537	486	9695	1369	636	274	111
May	9066	505	94959	1414	649	290	141
Jun	12939	297	83234	1597	839	357	194
Jul	16121	1786	16649	2390	1147	425	215
Aug	14208	1209	14339	2614	894	374	170
Sep	13262	3552	13513	4667	983	390	201
Oct	11355	4501	11917	5534	889	290	20[illegible]
Nov	7010	4565	6908	5355	625	277	121
Dec	8031	4827	8124	5534	604	288	109
Annual	117531	26142	269068	37099	9034	3695	1791

(1) Computed total releases. During period when the reservoirs are not in flood-control operation, releases are made to conform, as nearly as practicable, with requests by the City of Dallas from the Lewisville Reservoir and with the combined request by the City of Dallas and the Dallas County Park Cities Water Control and Improvement District No. 2 from the Grapevine Reservoir.

14 FEB 80 M.D.S. [illegible]

Figure 5-41

29JUL82 12:30P

N A V I G A T I O N T A B L E S U M M A R Y

	NAV	KEY	HUL	OOL	FEN	MAY	GIB	W.B	TEN	EUF	BSN	WIS	BUR	EQUI % BSN STR	VAN B
TOP C P	1010	723	733	638	745	619	554	490	632	585	460	471.6 478			TGT FLW

DATE	INFLOW(1000CFS) DISCHARGE(1000CFS) ELEVATION				# TULSA DISTRICT CORPS OF ENGINEERS #								EQUI % BSN STR = VAN B TGT FLW 2 DAYS LATER		
72882	1.5	5.9	0.0	1.5	2.5	5.4	6.0	11.0	0.2	1.0	23.0	0.0	19.7	3.9	19.7
	3.0	5.7	0.0	1.8	5.6	6.3	2.7	14.0	1.3	7.7	19.3	0.0			
	1012.20	727.77	733.15	639.94	742.43	619.62	553.52	489.76	631.77	584.95	458.88	477.91			
72982	1.5	6.0	0.0	0.8	1.0	4.3	4.4	12.1	0.2	0.8	21.5	0.0	21.1	3.6	21.1
	4.0	9.0	0.0	3.5	4.0	4.0	4.0	12.1	1.0	8.0	21.5	0.0			
	1011.89	727.55	733.13	639.75	742.28	619.65	553.54	489.74	631.62	584.79	458.86	477.87			
73082	1.2	6.3	0.0	0.6	1.0	4.1	4.1	15.3	0.2	0.6	23.9	0.0	23.5	3.1	27.1
	6.0	12.0	0.0	5.0	4.0	4.0	4.0	15.3	1.0	8.0	23.9	0.0			
	1011.33	727.15	733.10	639.44	742.12	619.65	553.53	489.72	631.48	584.63	458.84	477.84			
73182	1.0	7.5	0.0	0.4	1.0	4.1	4.1	19.4	0.2	0.5	27.9	0.0	27.1	2.6	26.5
	6.0	12.0	0.0	5.0	4.0	4.0	4.0	19.4	1.0	8.0	27.9	0.0			
	1010.74	726.82	733.08	639.13	741.97	619.64	553.53	489.70	631.33	584.47	458.82	477.80			
80182	0.8	9.0	0.0	0.3	0.8	2.4	3.2	21.2	0.2	0.5	30.0	0.0	29.7	2.2	25.6
	6.0	12.0	0.0	5.0	2.0	3.0	4.0	21.2	1.0	8.0	30.0	0.0			
	1010.11	726.60	733.06	638.80	741.89	619.51	553.43	489.68	631.19	584.30	458.80	477.77			
80282	0.8	8.5	0.0	0.2	0.6	3.8	4.0	21.2	0.2	0.5	30.3	0.0	30.2	1.9	24.7
	6.0	12.0	0.0	5.0	4.0	4.0	4.0	21.2	1.0	8.0	30.0	0.0			
	1009.47	726.34	733.04	638.46	741.71	619.46	553.40	489.67	631.04	584.14	458.80	477.73			
80382	0.8	8.0	0.0	0.1	0.5	4.1	4.1	21.1	0.1	0.5	30.2	0.0	30.1	1.7	24.0
	6.0	12.0	0.0	5.0	4.0	4.0	4.0	21.1	1.0	8.0	30.0	0.0			
	1008.83	726.05	733.01	638.12	741.53	619.46	553.40	489.65	630.87	583.97	458.79	477.70			
80482	0.8	7.8	0.0	0.1	0.4	4.1	4.1	21.1	0.1	0.5	30.2	0.0	30.1	1.5	23.5
	2.5	12.0	0.0	5.0	4.0	4.0	4.0	21.1	1.0	8.0	30.0	0.0			
	1008.59	725.74	732.99	637.77	741.35	619.45	553.39	489.63	630.70	583.80	458.78	477.66			
80582	0.8	6.7	0.0	0.1	0.4	4.1	4.1	21.1	0.1	0.5	30.2	0.0	30.1	1.4	23.0
	0.6	12.0	0.0	5.0	4.0	4.0	4.0	21.1	1.0	8.0	30.0	0.0			
	1008.58	725.35	732.97	637.41	741.16	619.45	553.38	489.61	630.53	583.63	458.77	477.62			
80682	0.6	3.4	0.0	0.1	0.4	4.1	4.1	21.1	0.1	0.5	30.2	0.0	30.1	1.1	22.7
	0.6	12.0	0.0	5.0	4.0	4.0	4.0	21.1	1.0	8.0	30.0	0.0			
	1008.55	724.72	732.94	637.05	740.97	619.44	553.37	489.59	630.36	583.46	458.76	477.59			
80782	0.6	1.8	0.0	0.1	0.4	2.4	3.2	21.1	0.1	0.5	30.2	0.0	30.1	0.9	22.5
	0.6	9.0	0.0	5.0	2.0	3.0	4.0	21.1	1.0	8.0	30.0	0.0			
	1008.52	724.18	732.92	636.69	740.88	619.31	553.27	489.57	630.19	583.29	458.75	477.55			
80882	0.6	1.6	0.0	0.1	0.3	2.1	3.1	19.8	0.1	0.4	29.2	0.0	29.4	0.7	22.0
	0.6	6.0	0.0	5.0	2.0	3.0	4.0	19.8	1.0	8.0	29.0	0.0			
	1008.49	723.83	732.90	636.32	740.78	619.12	553.16	489.55	630.02	583.12	458.74	477.52			
80982	0.6	1.6	0.0	0.1	0.2	3.8	4.0	15.7	0.1	0.3	25.5	0.0	26.5	0.6	21.6
	0.4	6.0	0.0	2.0	4.0	4.0	4.0	15.7	1.0	8.0	25.5	0.0			
	1008.49	723.48	732.87	636.17	740.58	619.08	553.14	489.53	629.85	582.95	458.72	477.48			

Figure 5-42

VI. SOFTWARE DEVELOPMENT TO SUPPORT USER REQUIREMENTS.

6.1 General. The purpose of Chapter 6 is to identify and describe in general terms the Water Control Data System (WCDS) software necessary to meet the water control user needs described in Chapter 5. The system of software consists of (1) applications software, which meets primary user needs, and (2) support software, which facilitates the integration of applications software into a coherent system which enables effective user interaction.

The following material is intended to provide a general description of the components of the software system. The relationship of one component to another, the general flow of data, and output product from each component is discussed. Detailed internal design of programs within the components is not within the scope of this chapter.

6.1.1 Applications Software. An overview of the WCDS applications software required to support user needs is shown in Figure 6-1. This system of software is divided into three main groups with each group containing several related components or programs.

a. Acquisition Group (A). This group contains components which provide capabilities for acquisition and basic processing of time-variant field data from all major sources.

b. Database Utility Group (B). This group provides essential database management capabilities, report generation, and displays.

c. Analysis Group (C). This group provides the basic data analysis tools, such as forecast, operation, and economic models. Results obtained from this group are used by project managers for making water control decisions.

6.1.2 Support Software. Support software integrates the applications software components to provide a user friendly system. This includes routines for program and computer control, database interface, records of system operation, and communications.

a. Control Routines (R). Control routines are important in dynamically and structurally integrating the operations of individual applications components into a coherent system. Automatic control of major, routine functions is a primary feature of the control system. Control components also facilitate effective interaction between users and software components.

b. Database Routines (D). Database routines provide for database entry and internal transfers.

c. Records Routines (L). Records routines provide information on system performance, a basis for troubleshooting system problems, and a means of tracking sequence of user-directed operations.

d. Communications (S). These routines provide for messages, remote conferencing, and inter-site communications.

6.1.3 Common Software. The basic needs of users may be satisfied by a common system of software. The common system provides a framework upon which site-specific needs may be built if required. Common software should be as generalized as possible and should have data files to describe unique local information. In other words, program code should not be designed to meet only specific user needs. Data files can be readily changed to reflect different user requirements, thus avoiding expensive program changes.

In certain cases, however, data-driven general software may not be appropriate, and specially developed software may be required. Software unique to specific sites is discussed elsewhere.

6.2 Applications Software. A schematic diagram of these groups, their individual component programs, key related files and their interrelationships are shown in Figure 6-1. Labels on the figure associated with individual groups and programs correspond to references in this text.

6.2.1 Acquisition Group (A). The Acquisition Group is the means by which basic data enter the system from sensors in the field, observers, or other external sources. For example, this group retrieves data from field stations, processes the data, and enters them into the main data base. Data communications programs receive and temporarily store small amounts of data from various field systems, including Geostationary Orbiting Environmental Satellite (GOES), National Weather Service (NWS) s/140 computers, and land-lines as well as from manual entry by field observers. The field observations, mainly stage and cumulative precipitation, are converted into other useful data, such as elevation, streamflow, reservoir storage, and incremental precipitation, and are then screened for validity and possible exceedence of critical values which would indicate emergency conditions. Valid data observations are then placed in a file for update into the main data base.

The Acquisition Group requires the following to operate:

a. Communications link to each data source (GOES downlink manual entry terminal, etc.).

b. List of valid station identifiers.

c. Scheduled reporting interval, parameters, data collection platform manufacturer, valid data range, data alarm values for each station.

d. Data conversion coefficients for stage-discharge, stage-elevation, stage-storage as appropriate.

The output from the Acquisition Group is a standard, formatted, sequential text file (D3) containing partially screened data in readable engineering units with appropriate location, parameter, and time labels. The file may be listed on a terminal or line printer if desired. This file is used as input to update the data base (D1).

6.2.1.1 GOES Communications Program (A1). The GOES Communications Program receives field observations from a Direct Readout Ground Station (downlink) and writes the data to either a memory buffer or an intermediate file for subsequent processing by the Conversion and Screening Program (A8).

Data are received at scheduled or random intervals depending upon the type of data collection platform at the field station. Scheduled reports and random reports are made on separate radio channels. Random reports are processed at higher priority than scheduled reports since they indicate the occurrence of critical events, such as intense precipitation or high river stage. In most cases regardless of whether the report is transmitted on a fixed schedule or at a random time, the data sample itself is actually taken at a regular even time such as each 15 minutes, 1 hour, etc.

Data received from the Direct Readout Ground Stations may be in either engineering units or non-readable "binary" form depending on the data collection platform manufacturer. Data observations passed to the user from the downlink include station (DCP) ID and time of receipt by the ground station as well as the measured variable values.

If the communications link between the ground station and the communication program is active, data may be passed from the downlink as soon as it is received. If the communications link is inactive, the ground station must hold the data in a buffer file until the link is re-established. When the link becomes active, all previously received data must be sent from the buffer file. The design of the ground station will govern whether data buffering may be performed. If no buffering takes place at the ground station, the communications link must be active at all times to preclude loss of data.

This program is capable of utilizing various communications protocols depending on the downlink site and whether the communications link uses a dedicated circuit or a dial-up circuit.

With a dedicated circuit the data received from the satellite can be passed to the processor immediately. The transmission rate from the satellite to the ground station is only 110 bps on each channel, so several channels can be serviced by a 300 or 1200 bps transmission line. With a dial-up circuit, the data must be stored at the receive site when not connected, and a backlog of data may accumulate. A high transmission rate is

preferred in transmitting the backlog to reduce on-line time. The rate required is dependent on the interval between connections and the number of messages accumulated. For dial up, transmission rates from 1200 to 4800 bps are usually necessary.

At transmission rates up to 1200 bps, simple asychronous procedures may be used. Therefore, the downlink site may be treated as if it were an interactive terminal providing data to the receiving system, even if it is actually another computer. Special multiplexors and modems must exist at each end of the communication line if asynchronous communications are to occur at speeds greater than 1200 bps. If such equipment is used, speeds of 4800 bps may be achieved on dial-up circuits and 9600 bps on dedicated circuits. Such special equipment is not normally available at sites and must be specially provided.

Synchronous communications can readily be provided at rates of 4800 bps for dial up circuits and 9600 bps for dedicated circuits. (However, with synchronous communication a communications protocol must be used. Various such protocols exist, although no common standard may be expected to be available for communication to all sites. The NOAA-NESS downlink allows dial-up 4800 baud access with a binary synchronous protocol unique to that installation hardware.)

Communications with different downlinks are achieved with several separate communications programs, rather than with a single comprehensive routine.

Minimal processing is done by the communications program, and data are output to the buffer area at almost the same rate as they are received. The Data Conversion and Screening Program, on the other hand, may process data at a slower or faster rate. Consequently, output from a communications program is saved in either a memory buffer or an intermediate file, depending on the size and availability of the memory buffer.

The GOES Communications Program is initiated either by user command or by the Master Control Program (a support program), based on a specific time interval. The routine runs as a real-time program at priority level 9 to preclude loss of data. Priority levels used herein are expressed on an arbitrary scale from 1 to 10, where 10 is the highest priority available. The output from the GOES Communications Program consists of transmissions from the DCP and from the downlink station. Some transmissions require translation before they may be used for any purpose.

6.2.1.2 NWS Communications Program (A2). Provision is made for interface to NWS data from the River Forecast Center s/140 computer system. In general, similar capabilities must be

provided for NWS s/140 communications access as are required for GOES access. The type of communication access (i.e., asynchronous or synchronous), transmission protocols, transmission speed, and buffering of data must all be addressed.

The NWS Communications Program must enter all data into the buffer area for processing and subsequent entry into the data base. The output consists of data files from the NWS system. These files are sequential text files which may be read and used as an intermediate product. The NWS Communications Program is a real-time program with priority level 9. It is initiated by the Master Control Program if data are buffered at the s/140 entry mode. If no buffering is available, it must be on-line continuously.

A further discussion of detail s/140 access is not possible without specifications of local Corps requirements at each respective site.

6.2.1.3 Land Line Communications Program (A3). Various devices exist for obtaining remote instrument readings by use of equipment attached to standard dial-up voice telephone equipment. Telemark's and DARDC's are examples of such devices in use by the Corps. Some GOES data collection platforms are also adaptable for telephone access. Each of these devices requires a synchronous communications. Information sent from the field site may be in directly machine readable form (DARDC sites), or may require processing by specially designed interface hardware and software (Telemark sites) at the receiving site.

The Land Line Communications Processor is capable of placing received data in the buffer area for processing and subsequent input into the data base.

It is a real-time program at priority level 9. Initiation is made by the Master and Control Program at specific intervals. It may also be initiated upon demand of the user. The output from the Land Line Communications Program is transmissions from land line stations.

6.2.1.4 Manual Data Entry Program (A4). The Manual Data Entry Program facilitates entry of data observations via interactive terminals at the local site or at remote locations, such as project offices. The program is structured to respond to a simple set of data entry commands. Entries are screened for completeness and simple validity, such as checks for non-valid characters. Where errors are detected, the user is informed, allowing immediate re-entry of correct values. Entries include location, variable identification, variable value, and time of observation. The program normally executes interactively, at priority level 5. It is initiated by user request. It may also be run in batch mode where data are read from a previously prepared data file. Simultaneous executions from several sites are permissible since each project file writes to its own memory buffer or intermediate file.

6.2.1.5 Inter-computer Data Link (A5). The Inter-computer Data Link is associated with the input of a file that has been sent to the host system from some remote site. A description of this function is given in paragraph 6.2.2.5.

6.2.1.6 Satellite Imagery Communications (A6). The Satellite Imagery Communications routine provides for the entry of a satellite image from a downlink station supporting imagery data. The routine provides the necessary protocol to establish connections to initiate transmission of data from the downlink. The image is received in digital form and passed to the Imagery Entry Processor (A13) for preparation for entry into the data base.

6.2.1.7 Radar Imagery Communications (A7). The Radar Imagery Communications routine provides for the entry of radar scans from a NWS radar site. The routine provides the necessary protocol to establish connections and initiate transmission of data from the radar site. The scan is received in digital form and passed to the Imagery Entry processor in preparation for entry into the data base.

6.2.1.8 Data Conversion and Screening Program (A8). The Data Conversion and Screening Program processes data observations that have been placed in its buffer area by any of the GOES, NWS, land line or manual data entry routines.

The program first translates the observation. Some of the observations are reported in a standard format, others are reported in special codes that require bit manipulation to translate.

In order to perform translation operations, information about the field site is obtained from the Site File (A9) which also contains information on the parameters expected, transmission times, etc. Next, the observation is converted from expression on an arbitrary scale to inches, feet, temperature, or other engineering units.

The third step is the low level screening of the data value. Low level screening assures that the data value lies within a range found in the site file for the parameter and gage location. Low level screening may also include checks on the permissible rate of change of the variable with respect to time. Alarm values are also checked for exceedence. Should the data value exceed the alarm value for the site and parameter, the Emergency Alert (A11) is triggered.

The next function of the Data Conversion and Screening Program is to transform observations of primary hydrologic data, such as stage and cumulative precipitation, into more useful data, such as elevation, flow, storage, and incremental precipita-

tion. Procedures and parameters for performing the transformation are stored in the site file and indexed by basin, station, and parameter codes. Several optional transformation procedures are available, including linear and non-linear table interpolation, and logarithmic and polynomial functions.

Data are then written to a sequential, formatted valid data file. The file is then used for database update and may be listed, and transmitted to other locations. The files of valid data are limited to a maximum length. This allows the file to be closed frequently and passed on to the database entry routine (D3).

The Data Conversion and Screening Program is initiated by calls from the communications programs through the Master Control Program and by user commands. The program runs as a real-time program at priority level 7. Several jobs may be executed simultaneously since program processing is de-coupled from communication input and from database entry. Access to the shared Site File (A9), Data Entry Log (A12) and emergency alert memory flags is controlled via a shared status table in memory.

6.2.1.9 Site File Utility (A10). The Site File Utility provides the capability to update the Site File (A9). This is necessary because the site file is a direct access (random) file which provides rapid access to specific file elements by the Data Conversion and Screening Routine (A8), and direct access files may not be edited with a text editor. Instead, they require a separate utility routine to allow for entry and update of information.

6.2.1.10 Emergency Alert Program (A11). The Emergency Alert Program is responsible for the automatic notification of key personnel of emergency conditions. The program sends an alert based on critical hydrologic conditions indicative of emergencies. The program runs as a real-time program at priority level 6 and is initiated by the Data Conversion and Screening Program (A8) upon the detection of a critical observation. The time of observation, time of detection, variable value, and basin, station, and variable identifiers are entered into a shared memory buffer. The information is also written to an alert log file (not shown).

A threshold may be set as to the number of sites that must generate an alert before the Emergency Alert Program is initiated. Once the program has been initiated, it is locked out of initiation for a specified period of time to allow a response from notified personnel. The program may also be locked out by user command. If an attempt is made by the Data Conversion and Screening Program to initiate the Emergency Alert Program while that program is locked out, alert information is simply entered into the memory buffer and the alert files until the program

becomes active again. At that time, program execution is initiated if another alert message is present in the memory buffer. The buffer may be cleared by the user to prevent redundant alerts. An alert during normal duty hours will broadcast a message to water control users terminals. During off hours, an auto-dialer and voice synthesizer may be used to notify on-call personnel.

6.2.1.11 Data Entry Log (A12). The Data Entry Log contains information on the entry of data from various input sources. Entries are made in the file when messages are received by the Data Conversion and Screening routine that cannot be processed or that contain illegal data. This log will contain an exact image of the message that was received. This will allow diagnosis of the error problem and possible reconstruction of the message. In addition the Data Entry Log will contain diagnostic messages generated by the satellite downlink station.

The Data Entry Log is the basis for a daily report that summarizes data entry performance.

6.2.2 Data Base Utility Group (B). The Data Base Utility Group provides a wide range of important, generalized capabilities in accessing, tabulating, plotting, changing, deleting, adding, copying, archiving, transmitting and receiving data stored in the data base. Programs in this group operate independently of each other, and provide complementary functions which, in total, are essential to a flexible and efficient approach to database management.

6.2.2.1 Report Generator (B1). The Report Generator routine is the primary means of producing end user products (B8) from the system. It is used to retrieve specific data from the data base, to sort, compile, format, and label the data and produce printed and CRT-displayed reports. Reports may be held in machine form and copies may be transmitted to other locations.

The report generator is usually driven by a file (B2) containing a description of the required data and associated formatting directives. The data may be qualified so that only values that meet stipulated criteria are included in the report. Simple computations may be performed, such as sums of report columns, and report data may be sorted before being output.

Each routine or standard report is described by a set of directives, allowing easy generation of periodic updates. Such reports may be initiated on demand of a user or based on a pre-set time schedule.

The Report Generator may also be used to generate ad hoc or query reports. These reports are usually produced on a one time basis only. They allow a manager to retrieve, search, sort, and display selected information from a large array of information at his disposal.

All data available to the Report Generator routine must be defined in a dictionary which describes the data base. The user references data by use of an alphanumeric label associated with the data item, as defined in the data dictionary.

6.2.2.2 Database Utility Program (B3). The Database Utility provides several manipulation and housekeeping functions necessary to maintain the data base (D).

A sorted inventory of the data base may be listed to show the stations, parameters, and time of the data available. The inventory provides an important aid for the database manager to copy, archive, purge or perform other such operations on the data base.

The archiving function provides a means of moving older portions of the data from on-line disk file storage to magnetic tape storage (B9). The restore function performs the inverse function. It allows an older portion of the data base to be restored to the disk file. When restored, older data may be used for historical comparisons, for re-evaluation, model testing, or other such purposes. The purging of data records removes the record from the data base. This allows the removal of records that have been archived, as well as records of a temporary nature that are no longer required.

Records may also be copied from one database file to another. Copying is one means of creating a small database file containing only certain records of the master data base. The copy function may be used to combine data records in two database files into a single file.

The Database Utility also provides a means of editing data in the data base. When editing, the data may be displayed, and changed. Points may be added or deleted from the record. The Database Utility Program can execute as either an interactive or batch control point job. The input structure consists of a series of commands with related parameters. In the basic interactive session, the user enters a command and its respective parameters one at a time. In the batch job, a series of commands and parameters are placed in a file and the file provides command directives during execution. Simultaneous executions of the program are permitted when operating on the data base, since the system provides for multiple access to the data base.

6.2.2.3 Display and Graphical Edit Program (B4). The Display and Graphical Edit Program provides capabilities for tabular and graphical display of information in the data base. Three types of data displays are provided: time series data, paired x-y data, and 3D x-y-z data. Each type of data may be tabulated or plotted graphically. In addition, if terminal characteristics allow, some types of data may be input or edited graphically.

Tabular output may be used on any alphanumeric output device (e.g., Silent 700 hardcopy terminal, CRT terminal, line printer). Tabular output is properly paged for the device being used. Graphical output may be used on black and white graphics CRT terminals (e.g., Tektronix 4014, 4114), color graphics CRT terminals (i.e., Tektronix 4027, 4113), or hardcopy pen or electrostatic plotters (e.g., Calcomp, Versatech, Zeta).

Graphical input or editing may be used on any terminal with an associated digitizing capability (e.g., Summagraphics digitizer, Tektronix tablet, or Altek digitizer).

Time series data may be presented in tabular form with appropriate time labels shown as well as station and parameter labels. Multiple time series data may be tabulated on the same output file subject to the width limit of the output device.

Time series data may be plotted with up to six separate curves on the same figure. Up to two types of parameters may be plotted, allowing, for example, both stage and flow to appear on the same figure. Time series plots may have an optional grid, be windowed to show data more clearly and be plotted to either automatically determined or user specified scales. If graphics input capabilities exist, time series data may be input by digitizing data. Similarly, time series data curves may be edited to remove erroneous points.

Paired x-y data may be presented in tabular form with appropriate labels fully identifying the data. If multiple dependent curves exist with a common and equal independent variable, multiple curves may be tabulated on the same output file subject to the width limit of the output device.

Paired x-y data may be plotted. If multiple dependent curves exist with a common independent variable, multiple curves may appear on the same figure. Up to two different dependent variables may be displayed using separate left and right side axis. If graphics input capabilities exist, paired x-y data may be input or edited.

3D x-y-z data may be presented in tabular form with data sorted by x, y, or z value or combinations thereof. If multiple data sets exist with two common and equal independent variables, multiple values may be tabulated up to the width limit of the output device.

Map plots of 3D x-y-z data may be made, where the z variable is shown by isoplots (contours). If multiple data sets exist with two common independent variables, multiple data sets may appear on the same figure. If the z variable is not significant such as for a map outline, only a connected polygon would be shown. This provides the capability of showing the map outline of a

basin, the main water courses, selected man-made features and an isohyetal pattern of precipitation--all on a composite figure. Where color graphics CRT terminals exist, isohyetal patterns may be color shaded to emphasize intense precipitation areas.

The Display and Graphical Edit program is normally run as an interactive program at priority level 4. It is also possible to execute the program as a batch job where directives are prestored in a file and output is directed to a plot file.

6.2.2.4 Mathpack Program (B5). The Mathpack program provides a comprehensive set of operations for the statistical analysis and transformation of data contained in the data base.

a. Several statistical analyses may be performed on the data in the data base. For time series data the following may be determined:

(1) The mean, total, standard deviation and skewness of any time series or portion thereof.

(2) The minimum, date/time of minimum, maximum, date/time of maximum of the complete time series or any recurring portion thereof. Recurring portions of time series may be, for example, each decade, each year, each of the four quarters of a year, each of the 12 months of a year, or each of the 365 days of the year.

(3) Duration curves, distribution function (histogram), or frequency curve for the complete or any recurring portion thereof.

(4) Goodness of fit statistics (error coefficients) between two time series.

(5) Serial correlation Coefficients of time series.

b. Several transformations may be performed in sequence on data in the data base. A new time series will result from a transformation step. At each step the new time series may replace an existing time series, it may be saved under a new identifier, or it may be held for use in a subsequent step. The following manipulations may be performed on an entire time series or portion thereof:

(1) Add/subtract a constant to/from each value.

(2) Multiply/divide each value by a constant.

(3) Raise each value to a power.

(4) Take log base 10 of each value.

(5) Take antilog base 10 of each value.

(6) Take log base e of each value.

(7) Take antilog base e of each value.

(8) Accumulate each successive value (running sum or mass curve).

(9) Difference of each successive value.

(10) Test if each value is LT, EQ, or GE a constant and if so set value to another constant.

(11) Add/subtract corresponding values of 2 time series.

(12) Multiply/divide corresponding values of 2 time series.

(13) Take reciprocal of each value.

(14) Replace each value with a linear interpolation from a tabular function.

(15) Change time interval.

(16) Determine moving average for specified span and skip.

c. Certain specialized functions are provided that would be difficult or awkward to produce with the general transformation capabilities. These include:

(1) Derivation of recurring inflow from reservoir pool elevation and outflow releases.

(2) Derivation of reservoir releases from pool elevation and gate settings.

The output from the mathpack program is the requested manipulation performed on the data. The results are available within the data base as well as in printed or plotted form where applicable.

6.2.2.5 Data Network Link (B6). The Data Network Link program works in conjunction with the computer's resident communications routines to exchange data and reports with other sites.

When sending information to another site the Data Network Link routine accesses the designated file, adds a preamble to the file indicating its destination and disposition at the receiving site. The file is then queued for transmission to the desired site. Transmission may occur through dedicated synchronous communication lines, auto dial-up synchronous lines, or manual dial-up synchronous lines. The sending site must act as the remote job entry site and the receiving site must be the host site.

When receiving information from another site, the received file is entered into the host system input queue. From the input queue the file is processed by the system as a batch job. The preamble statements in the file invoke the Data Network Link routine which directs the file to its final disposition. The information may be directed to a specific individual, a line printer, an interactive terminal, or into the receiving location's data base. Confirmation of the files disposition may be returned to the sender if desired.

6.2.3 Analysis Group (C). The Analysis Group comprises a set of complementary analytical tools for the analysis of current hydrologic events, primarily to provide critical information for immediate water-control decisions, but also for: postevent analysis; analyses of historical and hypothetical events, with alternative operational schemes; and training of water control personnel with simulated events. The analysis functions provided by the group include:

a. High-level data screening and validation.

b. Streamflow forecast model.

c. Operations simulation model.

d. Economic analysis.

e. Extended analysis.

Several Database Utility Group (B) Programs have important roles in analysis in entering and editing data, tabulating hydrographs, plotting hydrographs, hyetographs, and iso-hyetal maps, and computing correlations and duration curves on precipitation and flows.

Programs in the Analysis Group (C) use the Analysis Database Extract (D4), a subset of the main data base, in order to conserve access time, minimize interference with other programs, and simplify database management. This subset contains only the data records needed for the analysis of the user's particular basin, and the length of each time series record is restricted to that needed for analysis. The creation of the Analysis Database Extract is performed by the Database Utility Program (B3) according to specifications contained in an input macro file (not shown) defining the selected stations, variables, and time span. The extraction is performed and updated as needed during the analysis. The copy function of the Database Utility also stores selected analysis results into the main data base anytime desired during the analysis, but usually at the [illegible]

The Analysis [illegible] programs [illegible] nate current [illegible] of future hydrolog[illegible]

AD-A134 359 WATER CONTROL DATA SYSTEM SOFTWARE MANUAL(U) CORPS OF ENGINEERS DALLAS TX SOUTHWESTERN DIV FEB 83

UNCLASSIFIED F/G 13/2 NL

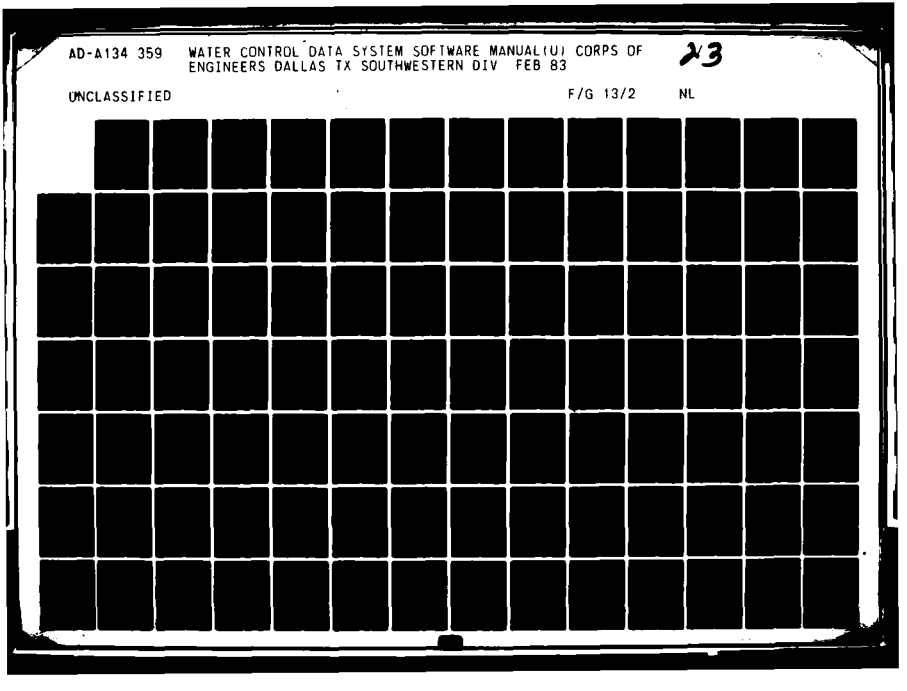

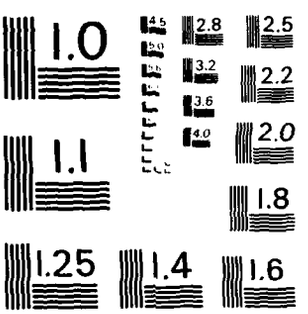

MICROCOPY RESOLUTION TEST CHART
NATIONAL BUREAU OF STANDARDS - 1963 - A

(5) Take antilog base 10 of each value.

(6) Take log base e of each value.

(7) Take antilog base e of each value.

(8) Accumulate each successive value (running sum or mass curve).

(9) Difference of each successive value.

(10) Test if each value is LT, EQ, or GE a constant and if so set value to another constant.

(11) Add/subtract corresponding values of 2 time series.

(12) Multiply/divide corresponding values of 2 time series.

(13) Take reciprocal of each value.

(14) Replace each value with a linear interpolation from a tabular function.

(15) Change time interval.

(16) Determine moving average for specified span and skip.

c. Certain specialized functions are provided that would be difficult or awkward to produce with the general transformation capabilities. These include:

(1) Derivation of recurring inflow from reservoir pool elevation and outflow releases.

(2) Derivation of reservoir releases from pool elevation and gate settings.

The output from the mathpack program is the requested manipulation performed on the data. The results are available within the data base as well as in printed or plotted form where applicable.

6.2.2.5 Data Network Link (B6). The Data Network Link program works in co-junction with the computer's resident communications routines to exchange data and reports with other sites.

When sending information to another site the Data Network Link routine accesses the designated file, adds a preamble to the file indicating its destination and disposition at the receiving site. The file is then queued for transmission to the desired site. Transmission may occur through dedicated synchronous communication lines, auto dial-up synchronous lines, or manual dial-up synchronous lines. The sending site must act as the remote job entry site and the receiving site must be the host site.

When receiving information from another site, the received file is entered into the host system input queue. From the input queue the file is processed by the system as a batch job. The preamble statements in the file invoke the Data Network Link routine which directs the file to its final disposition. The information may be directed to a specific individual, a line printer, an interactive terminal, or into the receiving location's data base. Confirmation of the files disposition may be returned to the sender if desired.

6.2.3 Analysis Group (C). The Analysis Group comprises a set of complementary analytical tools for the analysis of current hydrologic events, primarily to provide critical information for immediate water-control decisions, but also for: postevent analysis; analyses of historical and hypothetical events, with alternative operational schemes; and training of water control personnel with simulated events. The analysis functions provided by the group include:

a. High-level data screening and validation.

b. Streamflow forecast model.

c. Operations simulation model.

d. Economic analysis.

e. Extended analysis.

Several Database Utility Group (B) Programs have important roles in analysis in entering and editing data, tabulating hydrographs, plotting hydrographs, hyetographs, and iso-hyetal maps, and computing correlations and duration curves on precipitation and flows.

Programs in the Analysis Group (C) use the Analysis Database Extract (D4), a subset of the main data base, in order to conserve access time, minimize interference with other programs, and simplify database management. This subset contains only the data records needed for the analysis of the user's particular basin, and the length of each time series record is restricted to that needed for analysis. The creation of the Analysis Database Extract is performed by the Database Utility Program (B3) according to specifications contained in an input macro file (not shown) defining the selected stations, variables, and time span. The extraction is performed and updated as needed during the analysis. The copy function of the Database Utility also stores selected analysis results into the main data base anytime desired during the analysis, but usually at the end.

The Analysis Group Programs and applicable Database Utility Group programs are used by project managers and their assistants to evaluate current hydrologic and meteorologic conditions, make forecasts of future hydrologic conditions based on alternative projections of

current conditions and assumptions about future meteorological events, and to test alternative operation schemes under future scenarios in order to help formulate appropriate operational actions for current and future times.

In most applications, the Data Analysis Program (C1) is used first to establish the most likely, logically consistent set of data possible on which to base further analysis. Project management personnel use the Data Analysis Program to examine the validity of observed field data at individual locations in context with other, nearby stations. This is accomplished in conjunction with the Display and Graphical Edit Program (B4) to correlate mass curves of precipitation and runoff, to map precipitation patterns, and to edit erroneous data. In addition, the Data Analysis program estimates missing precipitation data, computes basin mean precipitation by period for use by the Streamflow Forecast Model, and allows direct user input of alternative future basin mean precipitation amounts for forecasting purposes. Adjustments to observed data and basin average precipitation are stored in the Analysis Database Extract.

Once the basic analysis data have been refined, the Streamflow Forecast Model (C2) is used to estimate future streamflows at key operation points. Future streamflows are the result of precipitation up to the current time together with future precipitation amounts and losses. Several alternative future scenarios with different precipitation amounts and ground conditions may be evaluated for comparing several alternatives. Projections of streamflow for each of the alternative scenarios are stored in the Analysis Database Extract.

The Operations Model (C3) simulates the effects of the operation of water control facilities such as dams, hydroelectric powerplants, and navigation locks on future hydrologic conditions. Alternative operational decision schemes are built into the model program and are selected by the user by operating interactively on the Basin Model File (C9) with the Operations Model Pre-processor (C8). The Basin Model File also contains information about streamflow routings and relevant operating characteristics of water control facilities. Hydrologic inputs at key control points and water control facilities are retrieved from the Analysis Database extract (D4) and results of alternative operation schemes are stored in it.

The results of either forecasting or operations simulation may be tabulated or plotted by the Display and Graphical Edit program (B4). Statistics may also be computed on the results and they may also be transformed by the Mathpack program (B5).

Benefits and losses (damages) occurring during one or several periods of time are computed with the Economic Analysis program (C4). Benefits and losses may be specified as functional dependents of hydrologic and hydraulic variables available in the Analysis Database Extract (D4), including flow, stage, and energy generated. The functional relationships defining, for instance, damages as a function of flow are also contained within the Analysis Database Extract. The computations of specific economic data are controlled primarily by means of interactive user directives.

Extended analysis (C5) capabilities may include reservoir water supply storage accounting for individual users, and forecasting and operations simulation models of coastal surge, tidal velocities, sediment transport, and water quality. (The inclusion of any of these analysis tools could involve additions or modification to the Data Analysis Program as well.)

In general, programs in the Analysis Group and Database Utility Group are run interactively to provide the flexibility and control desirable in the analysis process. Convenience and additional flexibility are provided with the integration of the Interactive Input Control System, which is described in paragraph 6.3.1.2.

The Streamflow Forecast and Operations Models must have provisions for interactive use, and user interrupt at various points as described in paragraphs 5.3.3.1 and 5.3.3.2.

6.2.3.1 Data Analysis Program (C1). Field observations of hydrologic and meteorologic time-series data stored in the data base by the Acquisition Group have been screened for fixed ranges of reasonable values and rates of change of values. However, the data need further screening before they can be used with confidence in the Analysis Process. Missing data must be filled in, and data from individual gages must be examined for validity in the context of the pattern shown by all other gages. This secondary screening involves a high degree of user interpretation and interaction. The Data Analysis Program (C1) in conjunction with the Display and Graphical Edit Program (B4) facilitates this secondary screening and provides several basic technical tools to assist the user. In addition, the Data Analysis Program provides means of saving the results of the secondary screening in a suitable format in the Analysis Database Extract (D4) for subsequent use by other Analysis Group programs.

Many of the capabilities provided by the Data Analysis program are oriented to the screening of meteorological data and derivation of areal patterns such as basin precipitation amounts because of the dependence of hydrologic events on meteorological ones. In the simplest analysis, mass curves of precipitation at several stations may be plotted simultaneously and

edited by plotted simultaneously and edited by graphical means, such as a light pen or graphics tablet with the Display and Graphical Edit Program (B4). At a somewhat higher level of sophistication, precipitation at a specific station may be derived or compared with surrounding stations by means of several conventional methodologies, such as weightings based on long-term averages, for instance, or regional correlation specific to the current event. At the highest level of sophistication, isohyetal patterns will be mapped by the Data Analysis Program and the map displayed and graphically edited by use of the Display and Graphical Edit Program. Furthermore, satellite and radar imagery may be mapped in the same format for comparison and registration of the imagery. Finally, when a reasonably consistent precipitation distribution is accepted, the Data Analysis Program computes basin average precipitation from ground data and imagery and stores the results in the Analysis Database Extract for use by the Streamflow Forecasting Model (C2).

As with precipitation data, the basic technique for secondary screening of streamflow data is comparison by plotting with graphical editing using the Display and Graphical Edit Program. At a higher level of refinement, runoff volumes per square mile may be computed for the current event by the Data Analysis program and compared with other streamflow stations, based on long-term averages, correlations, or precipitation patterns to evaluate continuity and to fill in missing values. Adjusted streamflow data are stored in the Analysis Database Extract for further analysis.

Basic field data for analysis are retrieved by the Data Analysis Program from the Analysis Database Extract, including observations of ground station precipitation amounts, satellite imagery of precipitation patterns, and streamflow. Other parameters, such as correlation coefficients, NAP values, and drainage areas may also be retrieved from the extract or may be entered interactively or saved in interactive user macros. (See paragraph 6.3.1.2 for a description of interactive user macros and their capabilities.)

6.2.3.2 Streamflow Forecast Model (C2) and Pre-Processor (C6). An estimate of future runoff is essential in making water control decisions and plans for operations. The role of the Streamflow Forecast Model is to estimate future runoff at key locations to provide a basis for analysis of alternatives.

Future runoff is a function of both past and future precipitation, soil moisture content, and the physical characteristics of the drainage basin. Data on past precipitation are retrieved from the Analysis Database Extract (D4) as sub-basin averages; the data have been screened and averaged using the Data Analysis (C1) and Display and Graphical Edit Programs (B4). Sub-basin divisions are consistent with streamflow gaging station locations.

Future precipitation is also retrieved from the Data Analysis Extract as basin averages. Several alternative future precipitation patterns and amounts may be investigated, and all will contain the same record for times prior to the forecast time.

The physical characteristics of the basin are described by data retrieved from the Basin Model File (C7), parts of which, are periodically extracted from the main data base as required by significant changes in the data. The file includes information on drainage areas, the stream network linkage and routing coefficients, unit hydrographs, loss rate function parameters, and parameters controlling some of the computational procedures and processing logic incorporated in the forecasting program.

In order to accurately forecast future hydrologic conditions, it is necessary to accurately assess the state of the basin at the forecast time, and it is essential that forecasted streamflows correspond with actual, observed flows at the beginning of the forecast. These needs are met to the extent possible by internally adjusting basin response variables with precipitation observed prior to the forecast time match observed streamflows during that period as nearly as possible. Observed streamflows are retrieved from the Analysis Database Extract. Where observed streamflows at a particular location include runoff from areas above an upstream gage, observed flows at the upstream gage are routed to the location and subtracted to compute the runoff for the intervening sub-basin corresponding to the gage at that location.

The Streamflow Forecast Model normally runs as a batch job. However, it should be designed to allow interactive interrupt at various points by the user. The user may need to observe results at various points in the forecast and make changes to the data prior to completion of the entire forecast. This user requirement is described in Chapter 5.

The Streamflow Forecast Pre-processor (C) is the interactive program used to control the initiation of the Streamflow Forecast Model and to make modifications to the Basin Model File (C7) necessary in day-to-day use. The pre-processor reads the Basin Model File, modifies its contents, and writes a modified, temporary version of the model file for immediate use by the model program. Modifications to the model parameters involving the internal accounting of time are made automatically by the program based on the forecast time. Other changes may be made by interactive user directives.

The pre-processor creates a job control file necessary to run the forecast model. When all modifications have been made to the model file, the job control file is placed in the batch job queue to initiate execution of the forecast model program.

6.2.3.3 Operations Model (C3) and Pre-Processor (C8). The role of the Operations Model (C3) in water control is to evaluate the effects of water control strategies and alternative water control

decisions on the hydrology and hydraulics of a particular region and period of time given the independent, uncontrolled hydrologic events occurring during that time. The effects of control actions are evaluated through mathematical simulations of hydrologic and hydraulic processes coupled with internal logic which parallels operations rules and decisions.

Operations objectives, strategies and decisions may be based directly on many combinations of variables, including reservoir storages, stages or flows at critical locations, power generation, water demand, and related economic variables such as revenues and costs. In addition, decisions are often influenced by unique external circumstances, such as recreation needs, construction activities and levee failures.

In most cases, operations decisions are indicated by a set of decision rules developed in accordance with overall strategies and objectives. These decision rules are incorporated in the logic of the Operations Model program. Moreover, alternative decision rules corresponding to different strategies and objectives are incorporated as well to facilitate rapid and efficient comparisons and contrasts among the different strategies and objectives. For example, the project manager might wish to compare a simulated operation with power production as a priority to one with a priority of meeting water supply demand. The selection of alternative decision rules is accomplished by changing key indicator variables in the program input.

When extraordinary, *external circumstances* influence operations decisions, unique control decisions may be tested by simply specifying the dependent decision variable rather than allowing the variable to be determined from an internalized set of decision rules. For example, a project manager faced with emergency construction downstream from a reservoir would like to simulate the effects of a specific release schedule on the reservoir pool and on downstream flows. Furthermore, the control actions indicated by conforming with decision rules, but generally are not consistent with practical operation. For instance, reservoir outflows simulated in accordance with a decision rule are computed to fractions of cubic feet per second and might fluctuate from period to period, while in practice, releases are specified to the nearest hundred cubic feet per second, and are held as constant as possible. The ability to specify releases allows the project manager to simulate the results of the final operation plan which is based on, but not exactly equal to, the plan indicated by pure conformance with decision rules.

Independent, time-variable decision variables, such as reservoir inflows and uncontrolled flows at downstream control points are retrieved from the Analysis Database Extract where they were stored by the Streamflow Forecast Model. Several different future scenarios may be represented by data in the extract file.

Fixed operation decision variables, such as channel capacity, are contained in the Basin Model File (C9), as are project and basin description variables, such as reservoir storage-elevation tables, streamflow routing parameters, and decision rule curves. Project description data are extracted from the master data base from time to time as required to maintain current information.

Data are retrieved from the Basin File (C9) by the Operations Model Preprocessor (C8). The pre-processor enables the project manager to make temporary changes to key operation variables interactively, as desired. A working input file to the Operations model is created incorporating the desired changes to the Basin Model File.

The Operations Model shall be designed to allow interactive use. As described in Chapter V the user may have a need to observe the results at various points and stop the model and make changes.

6.2.3.4 Economic Analysis Program (C4). The Economic Analysis Program has two basic purposes. First, in developing immediate water control decisions, it is often important to assess the economic consequences of alternatives for current real-time operations. The Economic Analysis Program is used for this purpose to estimate economic costs and benefits from projected hydrologic data stored in the Analysis Database Extract.

Secondly, it is standard and required practice in tracking the performance of water control projects to compute economic benefits following individual flood events. The Economic Analysis Program shall compute benefits for any number of events, but project benefits are normally computed at the end of each year and stored in the main data base for future reference.

The Economic Analysis Program is an interactive program. It is used in close conjunction with the Mathpack Program (B5). The latter computes multiple durations of hydrologic data, finds annual maxima and minima, and assigns probabilities to events by computing annual frequency statistics and evaluating the probabilities of individual events in terms of the statistics. Since the two operate closely together, the Mathpack Program may be called from within the Economic Analysis Program, and the two share common working database files for more efficient data transfer between them.

The Economic Analysis Program can evaluate costs and income for several categories, each for several durations of time-series data. Cost and income functions are stored in tables in the main data base and are also contained in the Analysis Database Extract.

6.2.3.5 Extended Analysis (C5). The Analysis Group (C) programs described in the immediately preceding paragraphs are ones that are essential in meeting the general basic needs of water control. However, basic water control needs in specific environments differ significantly. In offices with contractual water supply and power responsibilities, water supply storage demand allocation for individual users and power accounting programs are necessary. In offices with responsibility in coastal areas, coastal surge and tidal velocity models may be considered equally essential. Furthermore, certain specialized analysis functions in nearly all offices are very important if not essential. Related analysis programs include water quality models for lakes, rivers and bays, water surface profile models, and sediment transport models.

These programs which extend analysis capabilities share characteristics with the basic analysis programs described in detail above. Individual programs perform unique functions or a unique group of closely related functions that are distinctly independent, both structurally and functionally from other programs. The bulk of their input data consists of time series hydrologic, hydraulic, and meteorologic data and basin-related data which are maintained in the main data base, but directly accessed from an extract of the main data base. The programs run interactively except when they perform complex repetitive computations, in which case they run as batch jobs and utilize an interactive pre-processor for input of key variables and for control. Some of these programs may reside on large main-frame processors due to their size. The WCDS system would package the input data and submit them to the large system for processing. The results would then be retrieved back to the WCDS for display.

The power program computes allocations of power demands for each reservoir based on contractual commitments and long-term flow forecasts. The input to the program mainly includes forecasted reservoir inflows, outflows, and storage. Program output contains power generation schedules for each project.

Coastal surge programs combine analysis of meteorological and tidal data to forecast coastal surge resulting from storms.

Tidal velocity models provide the capability to analyze and forecast flows, velocities and stages within an estuary based on the tidal fluctuations at the estuary entrance, freshwater inflows to the estuary, and physical characteristics of the estuary and connecting channels.

Water quality models of lakes, rivers and bays superimpose models of physical, chemical, and biological processes which determine water quality upon the important transport processes operating in each of the different water environments. Water quality models require a considerable variety and volume of time-dependent input data in addition to flows and storage, including the quality of inflowing waters in terms of several variables, such as temperature, dissolved oxygen, and concentrations of chemical nutrients and organic matter, and meteorological data such as air temperature, wind velocity, and cloud cover.

Water surface profile and sediment transport models account for the geometry of streambeds and its effect on hydraulics in predicting stages and sediment scour and deposition. Water surface profile and sediment transport models require a substantial volume of data describing the geometry of streamcourses, mainly cross-section and profile data, and relatively little data on flows. Sediment transport models additionally require data on quantities, composition, and distribution of sediment in streambeds.

6.3 Support Software. Water control system Support Software consists of programs, subroutine libraries, and computer job control language - (JCL) based procedures (macros and procedure files) that integrate the basic discrete applications - related components into a coherent system and that provide supplementary capabilities in water control management. See Figure 6-2.

a. The Control routines operationally integrate application programs by controlling sequences and schedules of process (program) initiation.

b. The Records Group implement record-keeping as well as analysis of system operations for user information and control feedback.

c. The database routines are implemented in individual application routines as needed to provide access to required data.

d. Communications among users and water control managers at different work stations and different sites is aided by a collection of host computer capabilities and special programs.

e. Training of water control management personnel is aided by self-documenting, self-guiding interactive programs and documentation stored in system files. In addition, water control system operations may be simulated through use of the application programs with actual data, including, for example, large historic flow events.

Support Software makes appropriate use of host computer-based capabilities in order to achieve savings in development, efficiency in operation, simplicity, and savings in storage requirements. At the same time, system features are made invisible to the user as much as possible; a uniform command syntax and style are a primary objective of system design.

6.3.1 Control Routines (R). The Control routines provide the software necessary to operationally integrate water control system components, both applications and support programs, to function as a coherent, coordinated system. In general, program executions may be initiated automatically by the system or upon user command.

Automatic program initiations may be set to occur at a given frequency, every 10 minutes for example, on a schedule at specific times, or as the result of events, such as the end of execution of another program. All of the automatic initiation schemes may be conveniently changed by the user as desired.

User control of program initiations and control during interactive executions are enhanced through use of special function keys, input macros, and graphics tablet input together with an interactive, executive level program which controls the initiation of real-time, batch and interactive programs. Function keys, input macros and graphics tablet input are defined with files, which are easily changed by the user, thus avoiding the need for program changes.

Finally, job control language (JCL) procedures and macros are provided to enable the implementation of water control software on multiple host computers.

6.3.1.1 Master Control Program (R1). The Master Control Program is the primary control over all automatic system processes. This program is used by the system manager to control all clock driven system real-time programs. With it, the manager can initiate not only real time programs, but can also stop and suspend them and query or change their status. This program provides automatic initiation of water control system processes at regular intervals, irregular intervals at specific schedules times, or in response to calls from other processes. Any real-time or batch control point program may be initiated in this manner. In addition, processing priorities may be assigned among programs running under each of these categories. A schematic of the Master Control Program's operating environment is presented in Figure 6-3.

The Master Control Program also provides the automatic initiation of other processes. Three time initiated schemes are available:

a. Recurring at specified times--processors that must be initiated at specified times each and every hour are defined in the recurring hourly schedule. The time, measured from the beginning of the hour in minutes, indicates when the particular program should be initiated each hour. Analogous to recurring hourly schedules are recurring daily, weekly, monthly and yearly schedules. This allows certain products to be run each hour, others each day, and others only certain days.

b. Certain processes may best be initiated on a recurring interval basis, where the interval may not be conveniently expressed as described in paragraph a above. In such cases, an interval may be set at which a processor may be repeatedly brought into execution.

c. Non-recurring specific times--where it is desirable to execute a program once at some specified time in the future, the data/time may be set in the schedule. Programs may also be initiated upon direct request of a user.

The Master Control Program is initiated automatically at a frequency specified by the user (usually every 5 minutes). At each initiation, it checks the event schedule file defining processes to be initiated. Processes to be initiated may be real-time or batch control point jobs, such as reports generation or database maintenance processes or forecasts. Entries to the events schedule file are made by means of a simple text editor. In addition to scheduling information, file entries also define initiation parameters and execution priorities.

The Master Control Program also checks its message queue upon each initiation. Messages are sent to it by requests indicating other programs to be run and data files to be processed. The use of messages allows many separate tasks to request programs to be run without incurring inter-task communication conflicts.

The Master Control Program is also responsible for monitoring the status of events taking place on external communications lines. If data flow from an external source, such as a front end data acquisition machine, is disrupted the Master Control Program issues an emergency alert and switches to alternate sources, or may itself assume some responsibilities of the front end data acquisition machine, as appropriate.

6.3.1.2 Interactive Input Control System (R2). The Interactive Input Control System provides the user with convenience and extended capabilities in controlling and providing input to interactive and batch programs. The basic function of the system is to enable the user to save and structure routine input sequences for convenient, repetitive use. This is accomplished by: (1) defining specific terminal keys as "functions" which

invoke a longer specific line of input, (2) defining a sequence of input lines as a macro that can be invoked by a single command that refers to the macro by name, and (3) creating a menu so that the touch of a pen on a graphics table responds with one or more characters of input. Macros, menus, and functions may reference function keys. Macros, menus and functions may call macros. Also, functions and macros may invoke a menu for menu input. As indicated, functions and macros may be nested; for example, a function key may, in turn, be defined as a combination of other function keys as well as ordinary characters. One macro may call another macro.

The Interactive Input Control System consists of a library of routines that are linked with interactive programs. Functions, macros and menus are all defined in files which are specific to the individual user. The files can be conveniently edited with a text editor, resulting in maximum flexibility. In addition, functions and macros may be defined or redefined within an actual interactive program execution.

The implementation of the Interactive Input Control System in an interactive program is depicted in Figure 6-4.

A user's input line from the keyboard (shown at left side of figure) is intercepted by the input interpreter (at center) before any of the line is passed to the interactive program. (The input interpreter is actually one or more subroutines linked with the basic interactive program.) The input interpreter examines the intercepted line to see if is a directive to the Interactive Input Control System or contains function character references.

If the line is an Interactive Input Control system directive, then the directed task is performed (by directive processer at right) and a prompt is issued at the user's terminal for further input. Examples of tasks include initiation of a macro or definition of a function character.

If the user input line is data for the interactive program, the line is examined for references to functions, the character strings defined by the functions are substituted in their place, and the expanded line is passed to the basic interactive program. The function character definitions are stored in the function file (top left).

The macro and menu file (top center) essentially store user input for repetitive use. Macros are invoked by name with directives to the input interpreter which cause the lines of the macro to be read from the macro file. Macro lines are treated as if they were lines from the user's keyboard. In the reverse process, user input lines from the keyboard may be selectively saved in the macro file.

The menu file contains coordinates of areas on the graphics tablet and corresponding character strings to be used as interactive program input. Input from the graphics tablet (left center) consists of the coordinates of a point on the tablet touched by the input pen. The input coordinates are matched to the proper, pre-defined area, and the sequence of characters is passed to the input interpreter where they are treated as if they came from the user's keyboard.

The log file (top right) can optionally be used to record all input to a program for error tracking and other purposes.

The Interactive Input Control System provides other useful capabilities in addition to the basic interactive functions. The system allows the interactive user to interrupt the current program he is in, initiate other programs, or issue JCL commands or edit files and then resume execution at any point in the interactive program.

A log of all lines input to the program may be written to the session log. In this way a session log can become a valuable history of all input required to perform a given analysis. It may aid in reconstructing forgotten steps, or in tracking errors.

6.3.1.3 Interactive Executive Control Program (R3). The Interactive Executive Control Program provides control of all interactive programs from a single processor. Just as the Master Control Program provides control over all automatic processes, so the Interactive Executive Control Program provides control over all interactive processes. It also contributes to a uniform input syntax and makes available the features of the interactive input control system by bypassing the host computers JCL.

This routine is the normal means by which the interactive user gains access to the programs he desires to run. From the Interactive Executive Control Program all other interactive programs may be invoked. The use of this approach allows one entry point into the system to exist.

The user is identified when he initiates the Executive Control Program and is permitted to run only those programs appropriate to his task. Furthermore, the interactive user need not know any system job control language (JCL) as the Executive Control Program will call up the desired routines for the user. After signing on to the host computer system, the Interactive Executive Control Program is initiated by the system. The program checks the user access code and, if the check is positive, automatically initiates any preliminary processes necessary for the task. Once the preliminary processes are complete, the user initiates any programs in the selection offered by the Executive Control Program. A schematic depicting the hierarchy of control achieved with Interactive Control Programs is

presented in Figure 6-5. As shown in Figure 6-5, alternative executive control programs are used depending on the role of the user and his tasks in water control data management and analysis. The appropriate executive control program is initiated from job control language as part of the logon procedure based on the user's logon identification (upper middle box). Once the respective interactive executive program is initiated, the user has direct control over an array of other interactive programs routinely used in accomplishing his particular water control tasks with all of the features of the Interactive Input Control System, such as macros and functions. The water control manager (upper left-hand box) typically uses Analysis Group Programs such as a streamflow forecast model. The system manager (upper right hand box) is normally concerned with Database Utility Programs in maintaining and achieving the data base and generating routine reports.

Although the functional needs of the project and system managers in many cases involve distinctly different programs, they also share needs for certain functions. These overlapping requirements are met by providing direct access to commonly used programs, such as the Display and Graphical Edit Mathpack programs (at the center of the figure). In addition, other interactive programs which are only occasionally used can be indirectly initiated from the respective executive control commands by means of special chaining features.

When a user running in executive control program initiates another interactive program, control is passed to the new program until the user terminates the new one, at which control is returned to the executive control program. For example, if a project manager has logged on desiring to perform a streamflow forecast, he initiates the interactive streamflow forecast model pre-processor by a command to the executive control program. The executive control program then initiates and passes control to the streamflow forecast pre-processor (lower left on the figure). By issuing commands to the pre-processor, the project manager prepares and initiates a batch job for the streamflow forecast model (lower left). The project manager then terminates the pre-processor and is returned to the executive control program from where he can initiate other functions.

6.3.1.4 Inter-Computer Job Control (R4). The purpose of Inter-Computer Job Control is to enable the implementation of water control system software on multiple host computers, with part of the system, field data entry, for example, on one computer and the analysis routines on another.

Inter-computer Job Control consists of macros and procedures that utilize the initiating computer's resident remote job entry (RJE) capabilities to run a job on its alternate system

which acts as a host. Although control over the process lies with the computer which initiates the job via RJE, control may alternate between computers during the individual steps of any given process since the host may be directed to initiate an RJE in turn back to the original RJE site who would then act as a host.

6.3.2 Database Routines. The Database Routines consists of a generalized set of library routines for performing basic database operations together with specialized database interface programs: the Database Entry Program (D3) and the Internal Database Transfer. These specialized programs are key links in the structure of the Water Control System.

6.3.2.1 Database Library Routines (D5). The Database Library Routines contain a generalized set of subroutines which perform basic database operations on either the master or time series data bases, including access control, data record storage, retrieval, deletion and inventories, and database compression. These subroutines are linked with individual applications and support programs to affect integration of the basic Water Control System by providing communications between the data base and individual application programs.

The subroutines in the library are modular in structure: each performs a distinct, elemental operation. Complex operations are accomplished using combinations of the elemental routines. Together, the subroutines comprise a coherent system for database access and management.

6.3.2.2 Database Entry Program (D3). The purpose of the Database Entry Program is to enter observed and converted data into the master data base. The program reads data from a file of valid data created by the Data Conversion and Screening Program (A8), retrieves the corresponding record block from the data base, enters the new data into the data block, and writes the updated block back into the data base. If the record block does not already exist in the data base, it is created.

The Database Entry Program is initiated by periodic calls from the Data Conversion and Screening Program based on the number of entries that the conversion program has made into the file. When initiated, the Database Entry Program checks for the existence of the earliest written valid data file and enters that data into the data base. If the program is already busy when called, the request is ignored. When the file length limit is reached, it ends the current file, checks for the presence of another file to be entered and begins the new one if present.

The Database Entry Program executes as a batch control point job at priority level 6. Only one program execution is permitted at a time to reduce multiple database access activity.

6.3.2.3 Internal Database Transfer (D6). The Internal Database Transfer program moves related data between the Master Database, Time Series Database, and the Reports Database for subsequent references by the analysis program group and the Report Generator Program. The selection of data is based on information contained in a sequential file read by the Internal Database Transfer program during its execution. Data values from the Master Database are converted in alphanumeric forms and missing values are annotated. Occurrences of missing blocks of data, which would indicate, for example, that daily averaging had not been performed, are written to an error file and a message is sent to alert the database manager and refer him to the error file. Finally, the data are stored in the reports data base or time series (analysis program group) data base. The Internal Database Transfer program is normally initiated on a schedule by the Master Control Program: it usually executes during offpeak hours as a batch job.

6.3.3 Records Routines. The Records Routines consists of subroutine libraries and programs which are involved in recording and analyzing records of several water control management processes. Records routines provide important information on program performance, resource utilization, tasks accomplished, data entry and other information needed for system management.

6.3.3.1 Program Execution Log Entry (L1). The Program Execution Log is a file that contains a record of all executions of programs in the system. Entries are made at the initiation and termination of program execution and show the program identification, the date and time, the user identification, the terminator control point identification, the resources used during execution, and abnormal termination conditions. This log is analyzed by the Program Execution Analysis for basic usage and performance statistics such as frequency of use, time of use, failure rates and average resources used.

Since simultaneous log entries are possible, access to the log file must be controlled. This is accomplished by the use of the system message capability. Log entries are actually entered into a message instead of directly into the file. Then, a real-time program accepts the messages and writes them to the log file. This program is initiated automatically by the Master Control Program.

6.3.3.2 Program Execution Analysis (L2). Reports on program execution are produced from the Program Execution Log file by the Program Execution Analysis routine. This program computes simple statistics on usage and performance such as frequency of initiation, the time distribution of initiations, the durations of executions, number of initiations by user, and failure rates. These statistics are printed in a standard format and reviewed and saved by the system manager for the purpose of identifying and solving problems involving the dynamics of system operation.

6.3.3.3 Operations Log (L3). The purpose of the Operations Log is to record key communications between the District Water Control center and project offices, such as gate setting instructions and verifications.

Entries of this log are made in one of two ways. When communications between the water control center and project office are accomplished by means of a Water Control System communications program, a verbatim copy of all transmissions may be entered into the log by selecting an option in the communication program. When other communication paths are used, such as radio or telephone, independent entries are made by both parties from their respective sites by means of the Operations Log Entry Program. Regardless of which path is used to record operations communications, all entries are annotated by date, time, and user and terminal identification.

The Operations Log is a normal sequential file. A separate Operations Log is kept for each project, and project managers are responsible for managing their respective logs.

6.3.3.4 Interactive Session Log (L4). The Interactive Session Log is written by the Interactive Input Control System. It is simply a sequential file containing a record of all user input lines to interactive programs and its corresponding interpretation by the Interactive Input processor as seen by the interactive program. Its purpose is to provide the user with an immediate recall of input during an interactive session. The log can be displayed at any time at the user's terminal by listing the file. An Interactive Session Log is kept for each user.

6.3.4 Communications Routines (S). The Communications Routines consists of specialized programs, shared library routines, JCL macros, and resident host computer routines with the specific purpose of enabling various modes of computer-based communications, mainly text and plot files, among users on the same host computer and between two or more discrete host computers, each with multiple users. The specific communications paths important in the water control environment include: (1) messages; (2) bulletin boards; (3) program documentation; (4) multiple-user, remote conferencing; (5) inter-computer transmission of data, documents, reports, and plots. These paths are described below as if they were independent and discrete. In reality, host computer routines typically support a wide variety of paths, since communications are important in nearly all applications, the paths described can be modified and linked in many combinations.

6.3.4.1 Messages (S1). Messages, in the communications context, are relatively short blocks of text that can be addressed from one user, or program to another user program or terminal. A message is analogous to a postcard. It is short, and must be addressed to its destination. The destination is actually not the user, but a location where the addressee must look to discover the message, just as someone looks in a mailbox.

The message function is resident on many host computer systems. In some systems, the message may originate from a user's JCL call and from programs. Messages may be addressed to a particular user, terminal, or program, or all of these. The message may persist over a specified length of time, or may be eliminated after initial reception.

In the Water Control System, messages are sent by means of JCL macros and by calls to the resident routines from executive-level control programs or the user's command. Messages are received by similar paths. In addition, messages may be set to appear on user terminals as part of the sign-on or sign-off macros so that they are not missed by the addressee.

Text files may be used in conjunction with messages to relay longer pieces of information. The addressee is simply told by the message to look at the file where the information is contained.

6.3.4.2 Bulletin Boards (S2). The bulletin board is used to display information to users in general for various purposes, including: (1) news of Water Control System events, changes, problems and policies; (2) news of important hydrologic events, including NWS forecasts; (3) any reports for individual projects or basins; (4) organization-related matters such as personnel announcements, work schedules, and assignments.

Implementation of the bulletin board function is accomplished by simply creating text files and allowing general access to those files. Certain bulletin board files can be printed automatically within user sign-on procedures. This implementation provides virtually complete flexibility to suit particular water control organizations: the names and contents of bulletin board files are left completely to the discretion of users management.

6.3.4.3 Documentation (S3). A set of documents providing information on Water Control System software is stored in files and available to users for listing at interactive terminals or on a line printer. This material, available from the computer system, is referred to as "on-line" documentation. In addition, interactive programs provide explanations of their use during interactive sessions. This documentation, available with the program, is referred to as "in-line" documentation.

Software documentation generally contains information regarding program capabilities, relationship to other software components, and explanations and instructions for using the particular component. Documentation would be provided for both individual programs, shared routine libraries, and JCL macros. Other documentation would describe and explain file organization, file naming conventions, overall system structure and functioning, and training guides.

The documentation would be contained in a set of files, each file containing documentation on one or a series of related components or topics. In addition, an index file would list all documentation topics and corresponding file names and provide brief descriptions of components.

In-line documentation consists of explanations of command options. Explanation of specific options may be displayed at the user's terminal during an interactive session by a user request naming the option. The in-line documentation is read by the interactive program from an attached text file. These files may be edited by the program or system manager using a standard text editor.

6.3.4.4 Remote Conferencing System (S4). The Remote Conferencing Program enables concurrent display of text files, including reports and bulletins, to multiple users for conferencing purposes. In addition, interactive programs are capable of displaying results to multiple users, including plots.

The Remote Conferencing Program is an interactive program which simply reads text files, such as reports, bulletins, or documentation, and simultaneously lists the file at several user terminals. The program provides user control over listing by accepting line number range specifications.

Both the Remote Conferencing Program and other interactive programs with remote display capabilities rely on the availability of the receiving terminal: it must be on, but not logged on to the host computer's executive program. The receiving terminal is then treated as any other physical output device, and as a line printer, and output is sent to all connected terminals. Control of the process resides with the user who initiates the interactive program.

6.3.4.5 Inter-Computer Communications (S5). Inter-Computer Communications depend upon the RJE capabilities of the local host computer, as described in paragraph 6.2.2.5, and special encoding and decoding programs on the local and remote computers, respectively.

Coded files may be transmitted to remote sites by means of local host resident routines. Data values, documents, and reports all may be transmitted this way. Database files are not coded, and would require encoding and decoding for inter-computer transmission. Database utilities perform these functions.

Likewise, plot files which drive off-line plotting devices, such as Calcomp, are not necessarily coded and also need special encoding and decoding programs. However, it is easier and more flexible to transmit the data to be plotted and rely on general plotting programs at the remote site just as they would plot local data. By including the data within a JCL and plotting macro file, plotting at the remote site can be controlled by the local user if off-line devices are used.

The transmission process obviously involves a control sequence using several programs. Simplification of the control of routine transmissions is accomplished through the use of JCL macro files, and the entire procedure may be run as a batch control point job.

To further simplify transmissions procedures, any decoding at remote sites is controlled by means of JCL contained in RJE transmissions. Under this convention, the user at the receiving end need take only a passive part in the transmission process, and only view the results.

6.3.5 Training Aids. Certain components of the Water Control System have features and intrinsic characteristics that facilitate training of personnel in water control operations. Of particular interest is the use of the Analysis Group to train individuals. This group allows the analysis of both realtime events as well as historical events.

6.3.5.1 Documentation. Documentation contained in files accessible to all users provides essential information on what system components do, how they work, and how they are used. These are more fully described in paragraph 6.3.4.3.

6.3.5.2 Interactive Features. The self-documenting, self-guiding nature of all interactive programs make them useful in training. All interactive programs provide on-line display of available command options and explanations of individual commands selectable at user request at virtually any time during an interactive session. With the information provided, the user not only learns about command options and their input requirements and consequences, he also may infer the logical structure underlying the particular programs operation.

Another feature of interactive programs useful in training is error handling when the logical sequences of program use is violated or when typing errors are made on input.

6.3.5.3 Simulation. Many of the operations performed in the Water Control System may be readily simulated with actual programs and data without affecting the normal stream of operations and without special additional programs. This is accomplished by the use of special data files created and maintained separate from their normal system counterparts, and is made possible by the systematic reliance on information contained in files rather than embedded in software to describe key system characteristics.

Simulations of hypothetical or major historic flood events are an important example of Water Control System capabilities. The use of a specially created data set with a basic hydrologic description of the event is the basis for these kind of simulations. Special extractions of the data base are made for specific forecast times which only include data up to the forecast time. Users then interactively screen, display and change data, and perform forecasts and operations simulations as bases for operational decisions.

Although the simulations data base is separate from the normal one, copies of other user files may be identical with the normally used ones. For example, model files, JCL macros, and user defined input functions, macros and menus could all be the same as used in actual operations.

6.4 Interactions Between Individual Programs. The thoughtful design of program interaction is essential to achieving a water control software system that is coherent and comprehensive, yet is highly flexible, reliable, simple and straightforward. The desires for an understandable underlying logic, simplicity, and flexibility together with constraints on core memory and disk storage require that the overall system be an ensemble of individual programs functioning virtually as a single program. The programs are integrated as system modules in terms of both communications and control.

6.4.1 Communications. Communications among water control software components affect structural interaction of the system. Structural integration of water control programs consists of facilitating the systematic flow of information among the program modules. Each module has a unique, specific, and essential role in the processing of information, and the connections between modules utilize a common format and exchange protocol.

For the water control system, the basic information flow consists mainly of hydrometeorological time-series data together with two- and three dimensional spatial data and site data describing the physical characteristics of the prototype hydrologic system. The structural relationships among water control applications software is depicted in Figure 6-1.

The specific, local communications schemes rely on a full array of standard computer features as well as host-specific applications of standard features. The standard features include files, CPU registers, and memory areas. Host-specific services which are based on these standard features include indexed files, addressable messages, and shared common areas.

Messages are common, host-specific services. Messages can be sent by programs, job control language, and interactive users. They can be addressed to particular users, programs or physical devices. Messages are stored on disk areas and managed by host software.

Messages are important to the integrated functioning of the water control system. They allow straightforward and simple exchange of short pieces of information among users and program. The exchange requires no direct coupling between programs, addresses are logically based on program and user names, and accounting is transparent to user programs. Both control parameters and data are passed with messages.

Entries to the Program Execution Log are made using messages to a log entry program. This scheme decouples message writing and file availability avoiding the problem of a simultaneous write attempt by two or more programs. Emergency alert messages, to the Emergency Alert Program (paragraph 6.2.1.10) and the Master Control Queue (paragraph 6.3.1.1) are accomplished with a similar scheme.

Both shared memory areas and files are used to buffer the transfer of large volumes of data from communications programs to the Data Conversion and Screening Program (paragraph 6.2.1.8). Data are received and processed by the communications programs at rapid rate. The Data Conversion and Screening Program however, processes data more slowly, requiring a longer period of time for the same volume processed by a communications program. Consequently, the data transferred between them require temporary storage, or buffers. A shared memory area is used primarily since its use is more direct and involves fewer physical steps. However, files have the virtue of being safe against system failure since they are saved on disk. If memory buffers are primarily used, files must be used to store overflow from the buffers.

6.4.2 Control. The water control system utilizes inter-program control to achieve coherent operation. "Inter-program control" means a given program has the ability to initiate, hold, suspend or terminate the execution of other programs.

6.4.2.1 Initiation and Sequencing. Certain programs must run at regular, specific, pre-determined times. These include some of the data communications programs and the Report Generator. For convenience and reliability, these programs are scheduled in advance to be initiated by the Master Control Program (paragraph 6.3.1.1).

Other programs perform parts of a larger, sequential task, such as the overall data acquisition process, and their initiation depends on the completion of the preceding steps.

The successive initiations of programs involved at the various steps are accomplished in two different ways. One is use of a JCL procedure file. This alternative is appropriate when the sequence is relatively fixed. The other alternative is a request to the Master Control Program via a message entry into its queue. This is appropriate for sequences which may be allowed delays between steps. The internal logic and related schedule files of the Master Control Program provide a capability of arbitrating the future scheduling of the initiations of programs in its queue and on its schedule as required to achieve an orderly and timely completion of all tasks within a desired level of loading on the host's CPU resources.

Interactive programs typically are used in a variety of sequences which cannot be scheduled beforehand. Logical groups of interactive programs are controlled with respective Interactive Executive Control programs (paragraph 6.3.1.3). For example, the water control project manager will use Analysis Group programs, the Graphical Display and Edit programs, and the Database Utility Program in ordinary interactive sessions.

The Interactive Control Programs for this group clears users' access codes, defines global parameters for the session, such as basin name, automatically initiates housekeeping processes, and controls the sequence of interactive program executions according to the user's directives.

Support programs which perform continuous control, logging, or monitoring tasks are real-time programs which are initiated at specific frequencies by the host system. Initiation frequencies are variable and are specified by the system manager. These programs include the Master Control Program (paragraph 6.3.1.1) and the Program Execution Log Entry Program (paragraph 6.3.3.1).

6.4.2.2 Processing Priorities. A hierarchy of priorities is assigned to individual programs in the water control system. This hierarchy provides systematic arbitration of the sequence in which contending tasks are to be performed in order to assure the timely completion of the most important tasks.

The hierarchy of priorities is specified in two ways. First, the host system provides a means of assigning processing priorities to program executions on an absolute scale. Real-time and batch jobs are explicitly assigned priorities through JCL at the time of initiation. Priorities for interactive programs are assigned according to the priority of the terminal from which the job is initiated. The terminal, in turn, is assigned a priority by the system manager within overall system definitions. A chart of normal system priorities is presented in Figure 6-6.

The Master Control Program (MCP) provides an alternative means of assigning priorities which differs from system priorities. The MCP enables different programs within a job sequence to run at different host system priorities. For example, the Data Conversion and Screening Program is run at a higher priority than the Database Entry Program even though the two process data sequentially on a routine basis: the screening of data for alarms has greater priority than database entry. Priorities within the MCP are defined in a sequential file of program identifiers and associated system priority codes.

6.5 Relationships Among Software Components and Requirements. Interactions among individual software components are potentially complex: components can be linked in a variety of sequences in order to meet a wide range of needs. Figure 6-6, however, presents a simplified view of the interactions between programs and the inter-relationships between components and common requirements in order to facilitate a better understanding.

In general, the matrix presented in Figure 6-7 indicates specific software components involved in meeting specific requirements. Common requirements shown as labels to rows are products and capabilities described in Chapter 5. The column labels are software components and groups of components identified in this chapter.

In addition to indicating inter-relationships between components and requirements, the matrix also suggests interactions between components in the processes involved in fulfilling the requirements.

For applications components, numerals appearing in the row of a specific requirement indicate that the component is ordinarily involved in meeting the requirement in a sequence shown by the numerical order where several alternative components are appropriate at a particular step in sequence, all are given the same step number. Where the concept of a sequential order is inappropriate, the numeral 1 is used exclusively.

Support software, in contrast to applications software, is typically involved in several steps of the sequential process used in meeting requirements; therefore, it is inappropriate to indicate an order. Instead, letters are used to show the degree of importance in meeting

user requirements since certain support components are intended to enhance the basic capabilities to which other support software is essential. The degrees of importance are shown in three levels corresponding to whether the component is necessary, preferred, or desired for convenience or extra utility.

The relationships among major software groups, user actions, and user requirements are also presented in Figure 6-8 which depicts the generalized flows of data within the Water Control Data System. Data values for observations of time-variant hydrologic variables comprise 80-90 percent of the total flow and storage of information in the system: Figure 6-8 mainly depicts the flow of that data through the water control data system's major processing operations. Some of the principal flows of user directives and user products are also indicated.

6.6 Known Availability of Software Components. The known availability of software components is presented in Figure 6-9. Individual components and systems are tabulated in the order addressed in this chapter. Opposite each component are tabulated its principal functional requirements, potential source, estimated costs, and remarks pertinent to its availability. Principally needed capabilities were compiled from descriptions in this chapter. Costs of components are judgments based on expected relative length and complexity compared with existing software and its related costs. The costs include modification of reasonably close substitutes and documentation, but do not include maintenance.

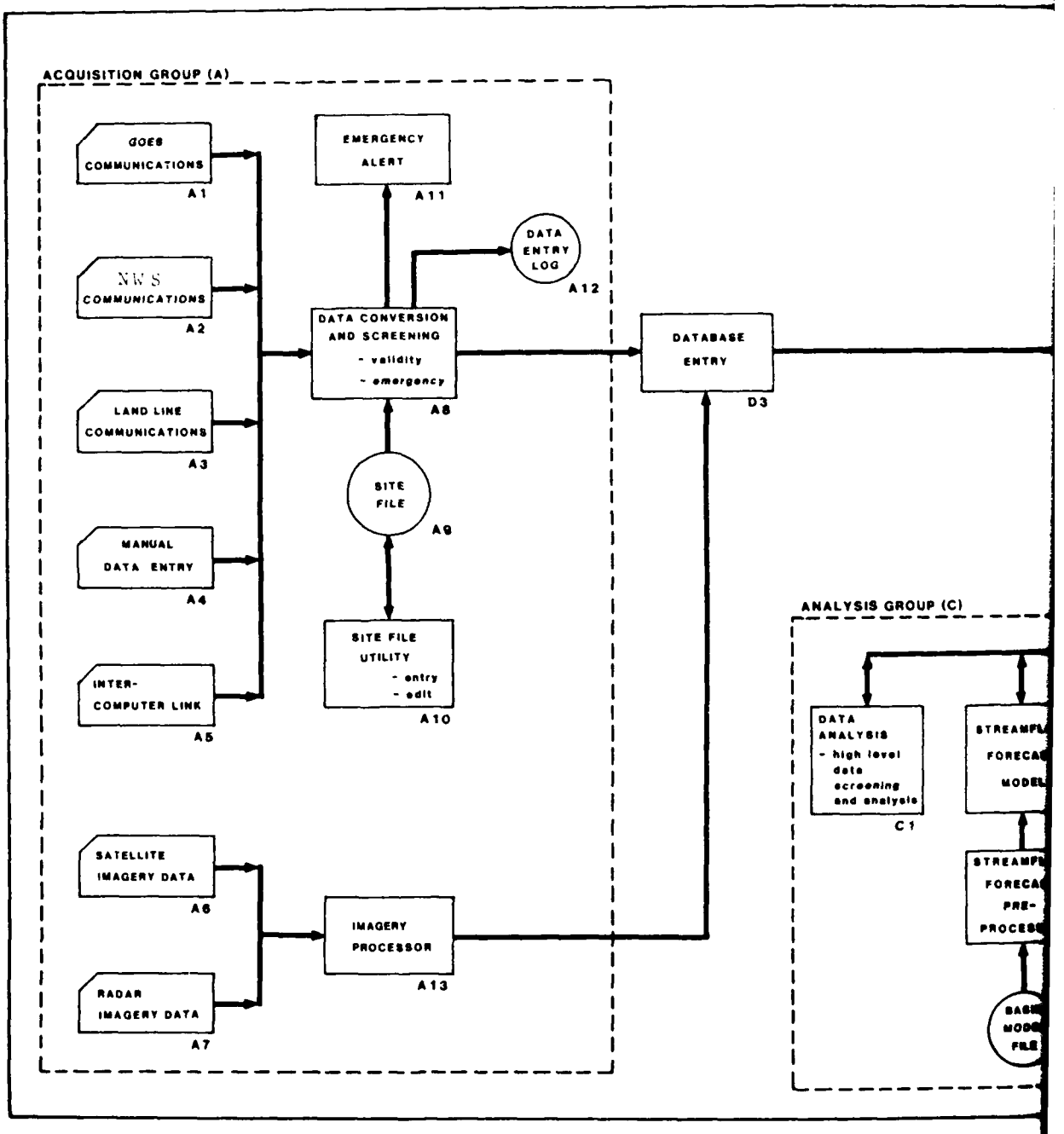
ACQUISITION GROUP (A)
GOES COMMUNICATIONS
A1
NWS COMMUNICATIONS
A2
LAND LINE COMMUNICATIONS
A3
MANUAL DATA ENTRY
A4
INTER-COMPUTER LINK
A5
SATELLITE IMAGERY DATA
A6
RADAR IMAGERY DATA
A7
EMERGENCY ALERT
A11
DATA ENTRY LOG
A12
DATA CONVERSION AND SCREENING
- validity
- emergency
A8
SITE FILE
A9
SITE FILE UTILITY
- entry
- edit
A10
IMAGERY PROCESSOR
A13
DATABASE ENTRY
D3
ANALYSIS GROUP (C)
DATA ANALYSIS
- high level data screening and analysis
C1

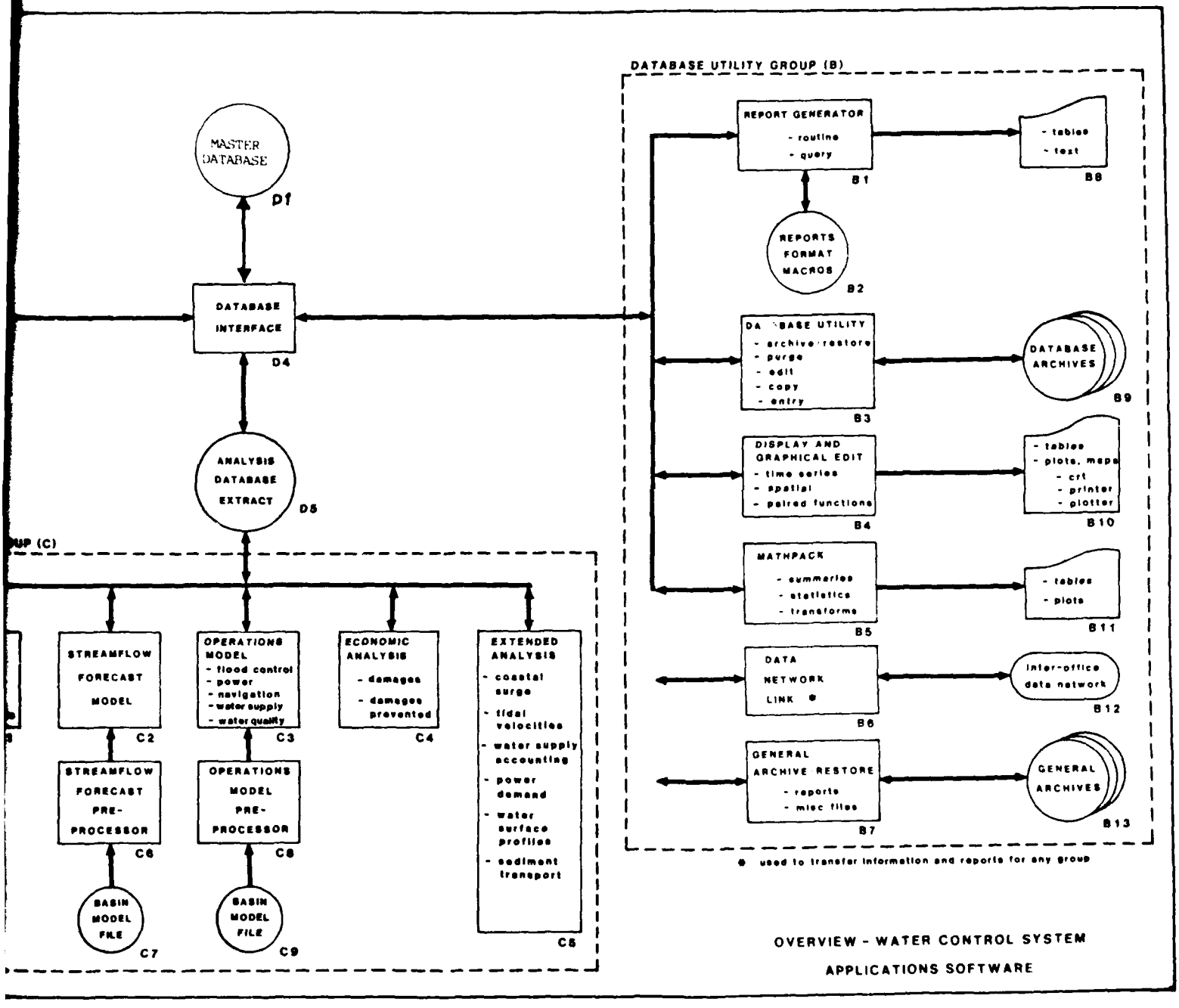
DATABASE UTILITY GROUP (B)
MASTER DATABASE
D1
DATABASE INTERFACE
D4
ANALYSIS DATABASE EXTRACT
D5
REPORT GENERATOR
- routine
- query
B1
- tables
- text
B8
REPORTS FORMAT MACROS
B2
DATABASE UTILITY
- archive/restore
- purge
- edit
- copy
- entry
B3
DATABASE ARCHIVES
B9
DISPLAY AND GRAPHICAL EDIT
- time series
- spatial
- paired functions
B4
- tables
- plots, maps
- crt
- printer
- plotter
B10
MATHPACK
- summaries
- statistics
- transforms
B5
- tables
- plots
B11
DATA NETWORK LINK *
B6
inter-office data network
B12
GENERAL ARCHIVE RESTORE
- reports
- misc files
B7
GENERAL ARCHIVES
B13
* used to transfer information and reports for any group
UP (C)
STREAMFLOW FORECAST MODEL
C2
OPERATIONS MODEL
- flood control
- power
- navigation
- water supply
- water quality
C3
ECONOMIC ANALYSIS
- damages
- damages prevented
C4
EXTENDED ANALYSIS
- coastal surge
- tidal velocities
- water supply accounting
- power demand
- water surface profiles
- sediment transport
C5
STREAMFLOW FORECAST PRE-PROCESSOR
C6
OPERATIONS MODEL PRE-PROCESSOR
C8
BASIN MODEL FILE
C7
BASIN MODEL FILE
C9
OVERVIEW - WATER CONTROL SYSTEM
APPLICATIONS SOFTWARE

FIGURE 6-1

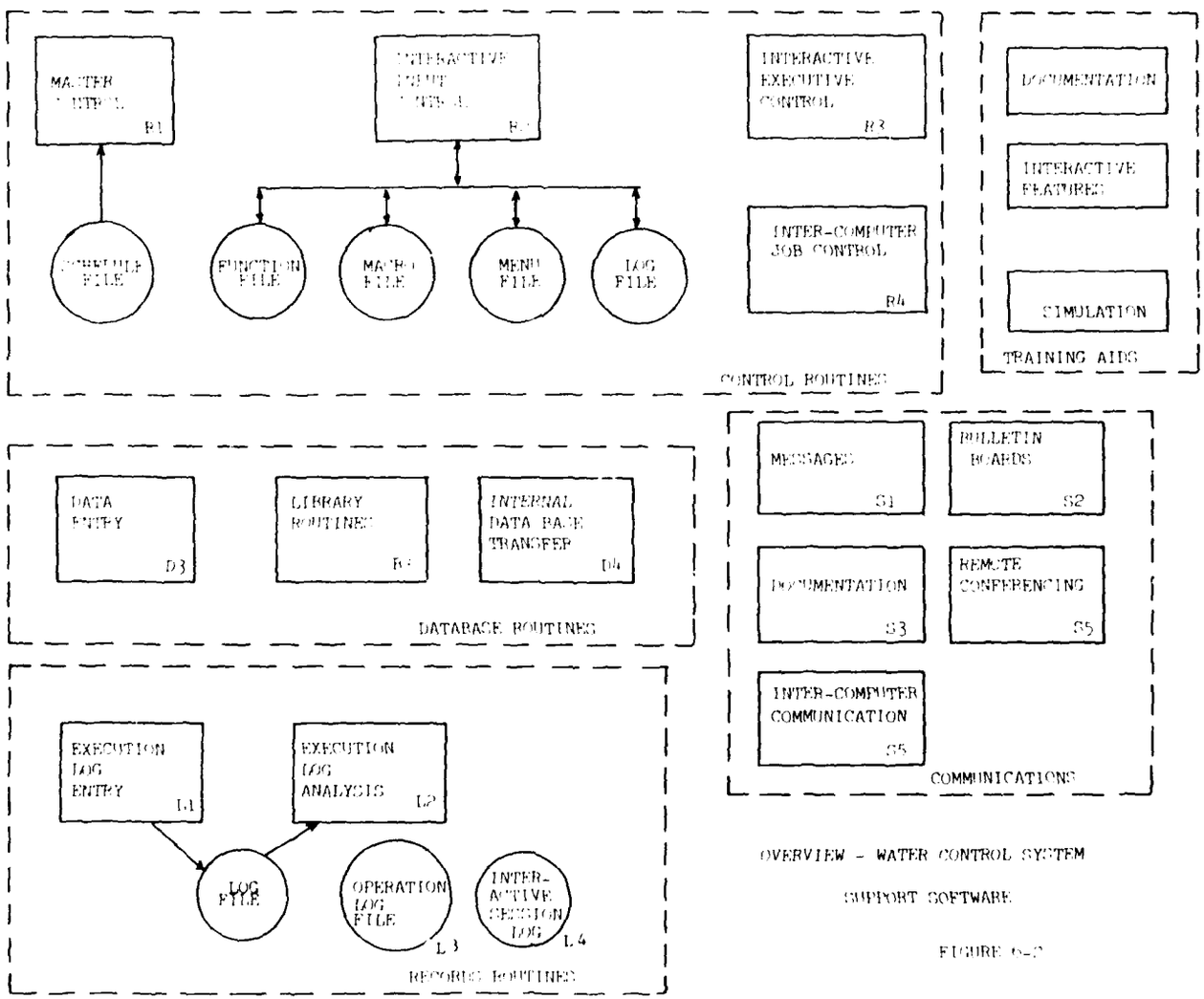

OVERVIEW - WATER CONTROL SYSTEM

SUPPORT SOFTWARE

FIGURE 6-2

FIGURE 6-2

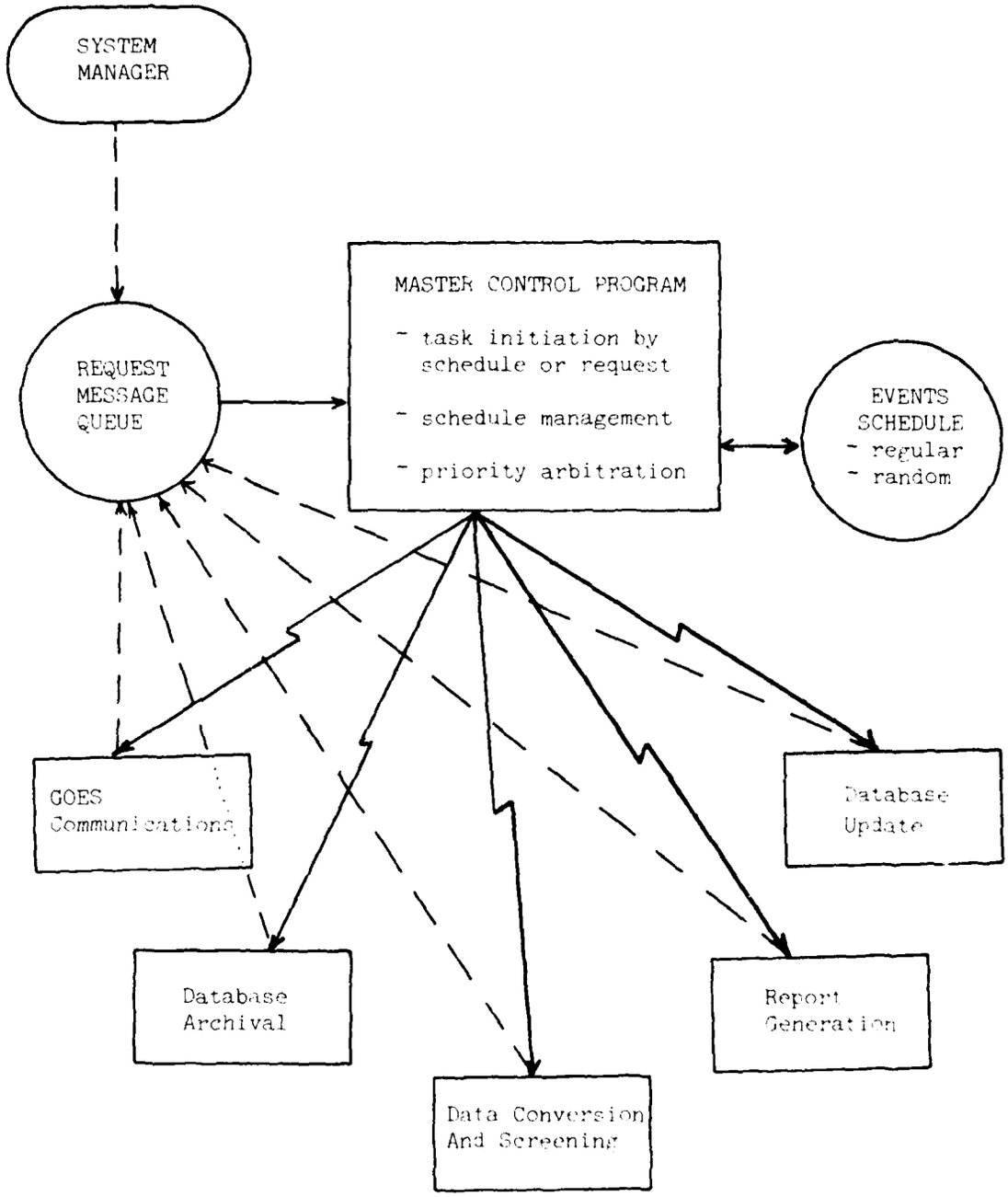

MASTER CONTROL PROGRAM

SCHEMATIC

FIGURE 6-3

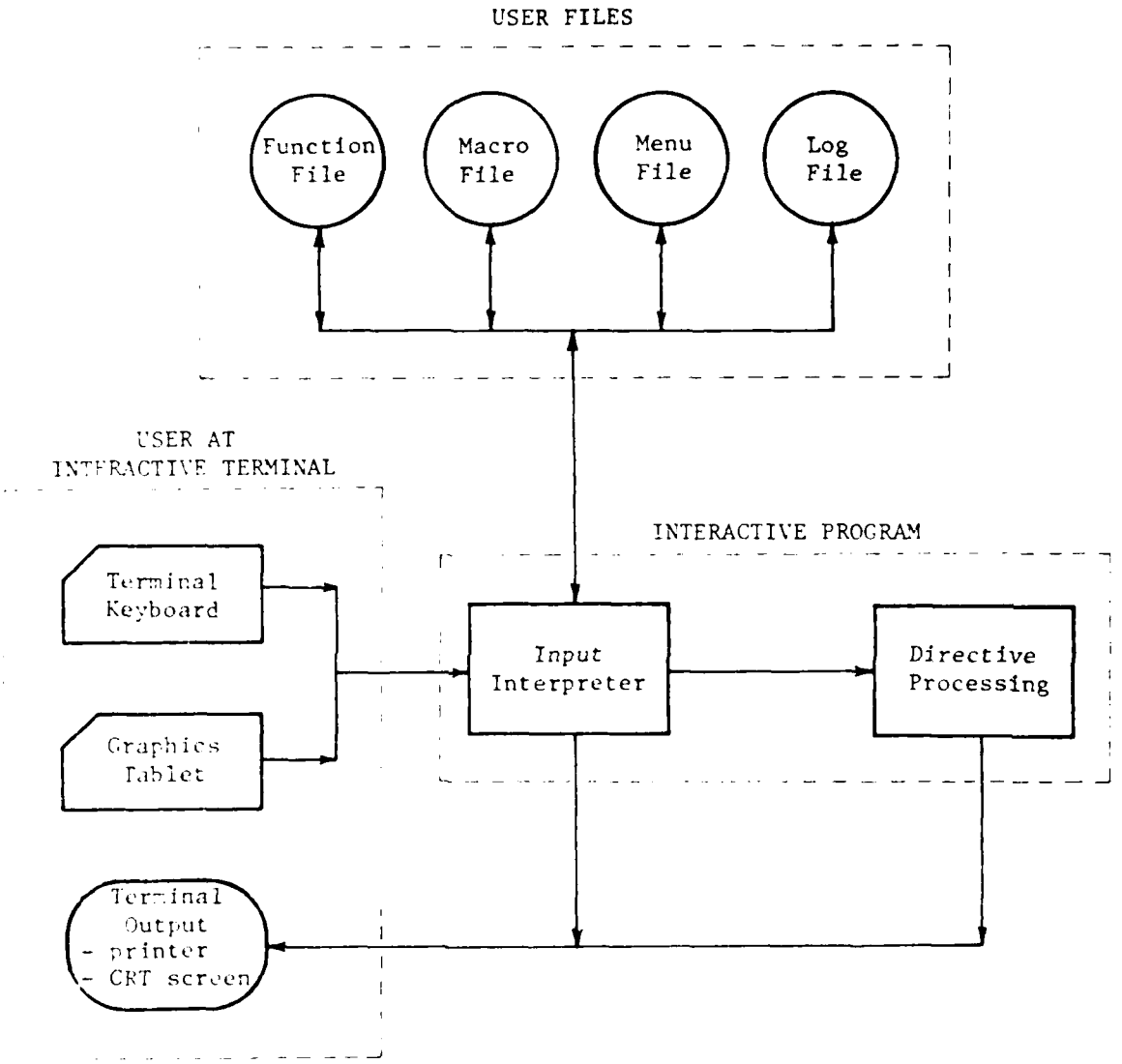

INTERACTIVE INPUT CONTROL SYSTEM SCHEMATIC

FIGURE 4-1

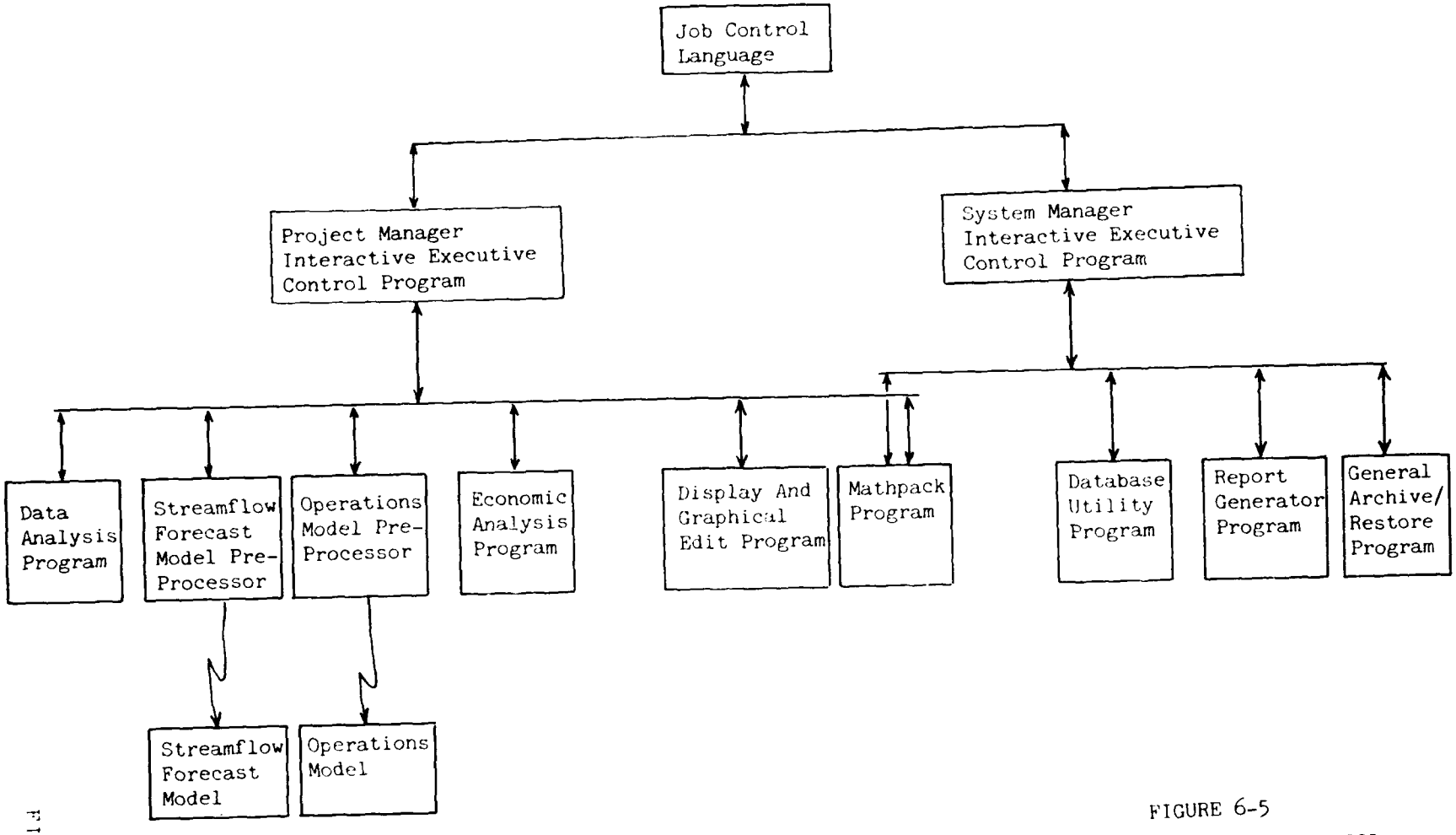

FIGURE 6-5

TYPICAL INTERACTIVE CONTROL

HEIRARCHY

FIGURE 6-5

FIGURE 6-5
PROCESSING PRIORITIES

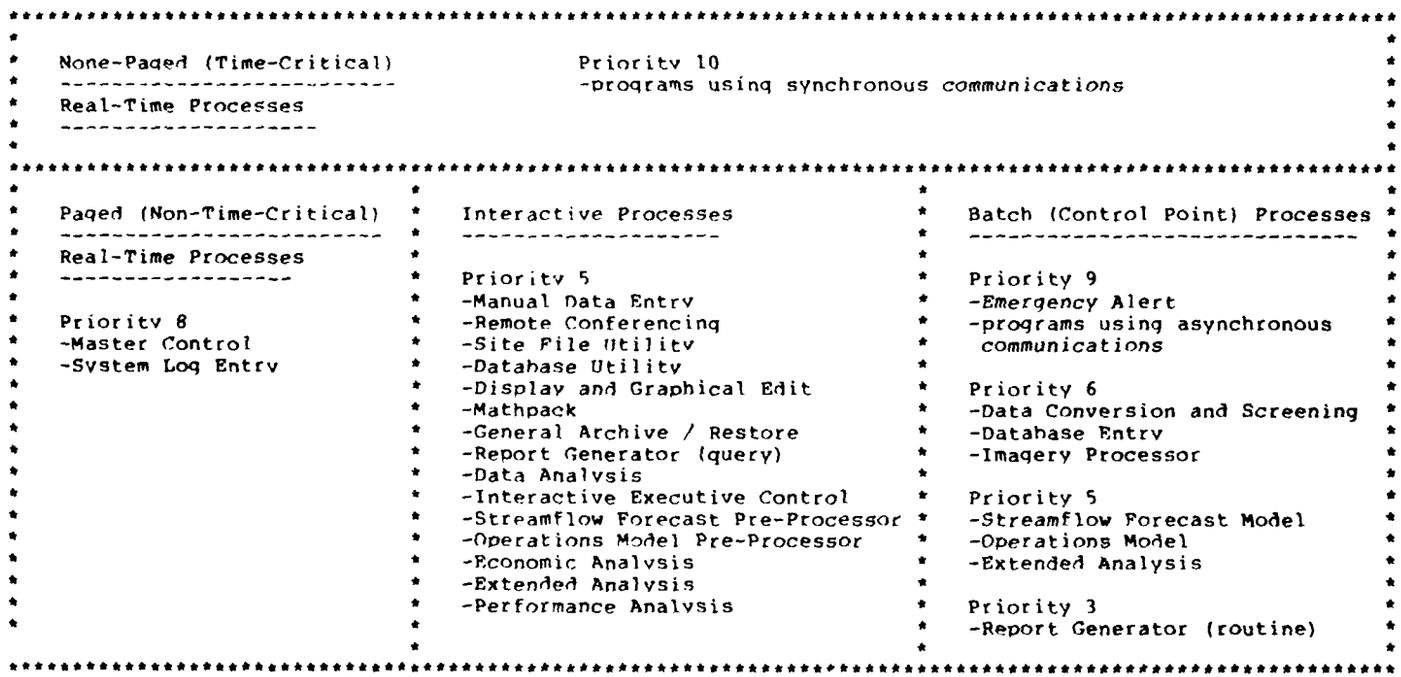

Notes: 1. Non-Paged real-time programs remain in core memory at all times during execution for instantaneous response to demands and can be initiated on a time schedule or on demand. Paged real-time programs, on the other hand, are swapped (paged) to and from the disk since they do not require an instantaneous response to demands. Paged Real-Time programs are different from interactive and batch programs in that they can be initiated automatically at pre-determined times and initiated repetitively at specific frequencies.

2. Interactive processes are assigned priority based on the priority of the terminal from which they are initiated. The terminal's priority, in turn, is assigned by the computer system manager.

3. Programs running in a batch or control point mode are assigned priority by the job control procedures by which they are initiated.

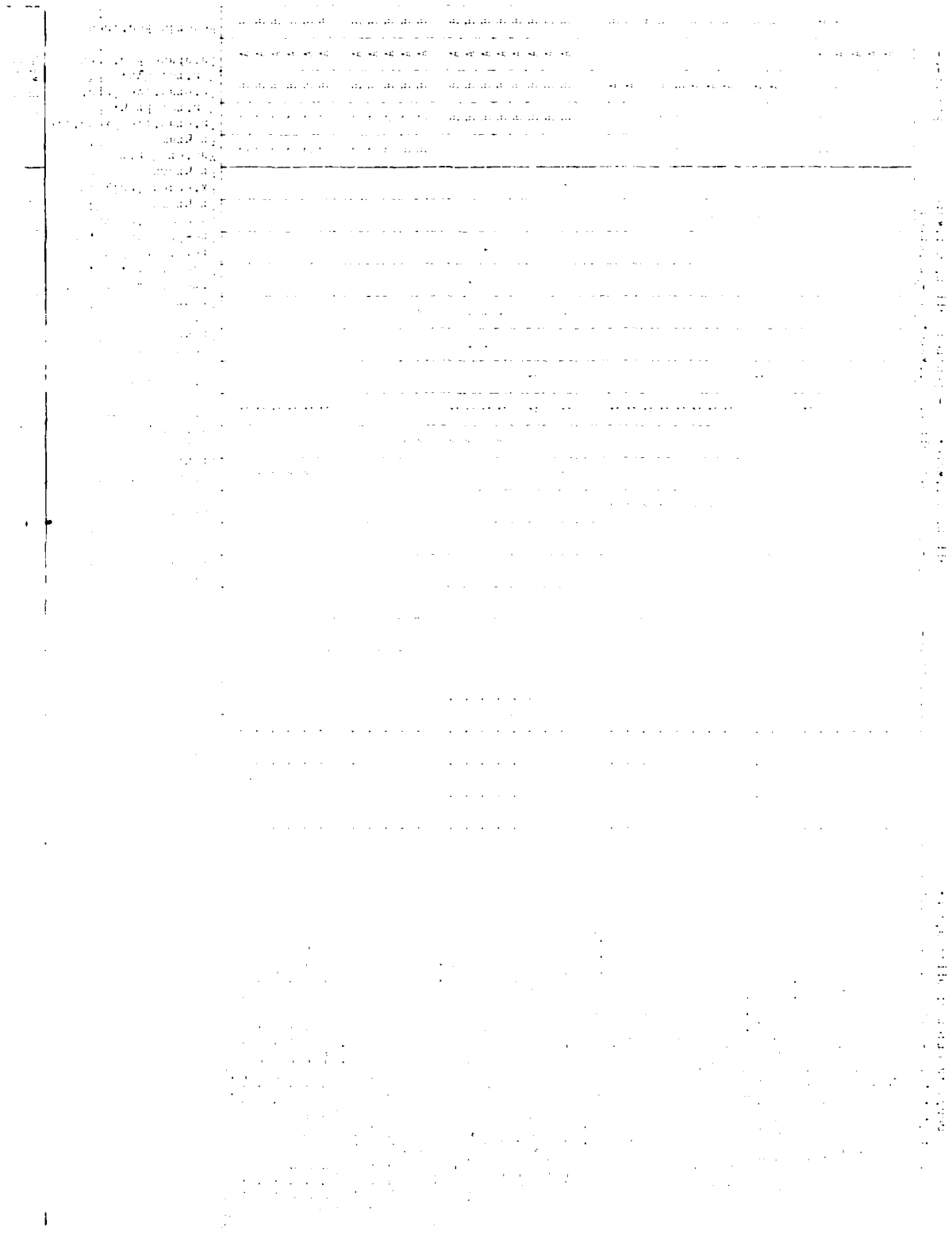

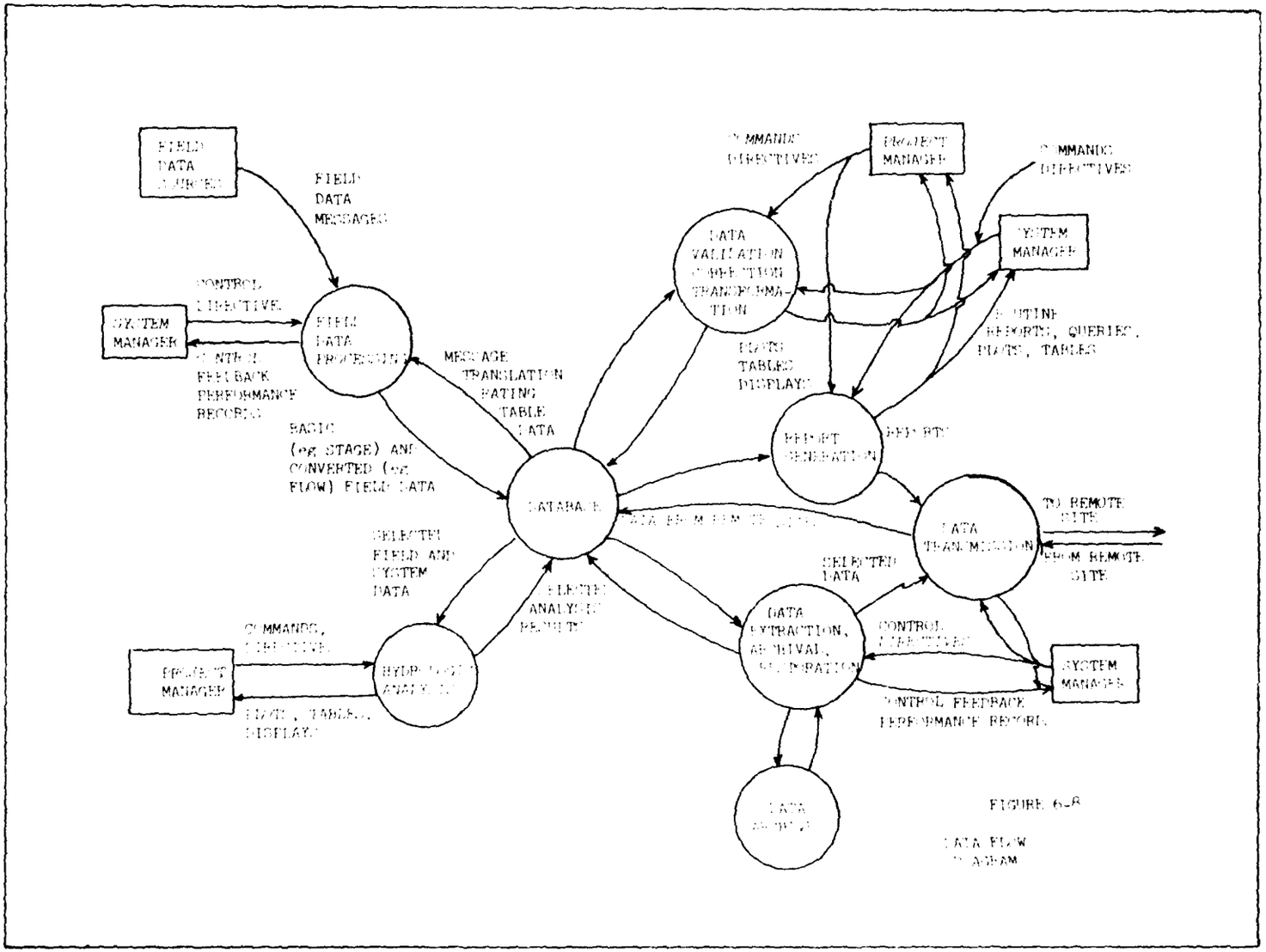

FIGURE 6-8

DATA FLOW DIAGRAM

[illegible]	[illegible]	[illegible]	[illegible]	Remarks
[illegible]	[illegible]	[illegible]	[illegible]	Funded by OCE
[illegible]	[illegible]	HEC-HEC-11 SSARR, NWS-RFS	[illegible]	For special capabilities as required SSARR $50k NWS-RFS $80k
[illegible]	[illegible]	HEC-HEC5	50	For special modifications as required
[illegible]	[illegible]	HEC HEC-Ag Damage, EAD SWD-SUPER HEC-Little Rock	50 25	Internal analysis
[illegible]	[illegible]		25 25 35	

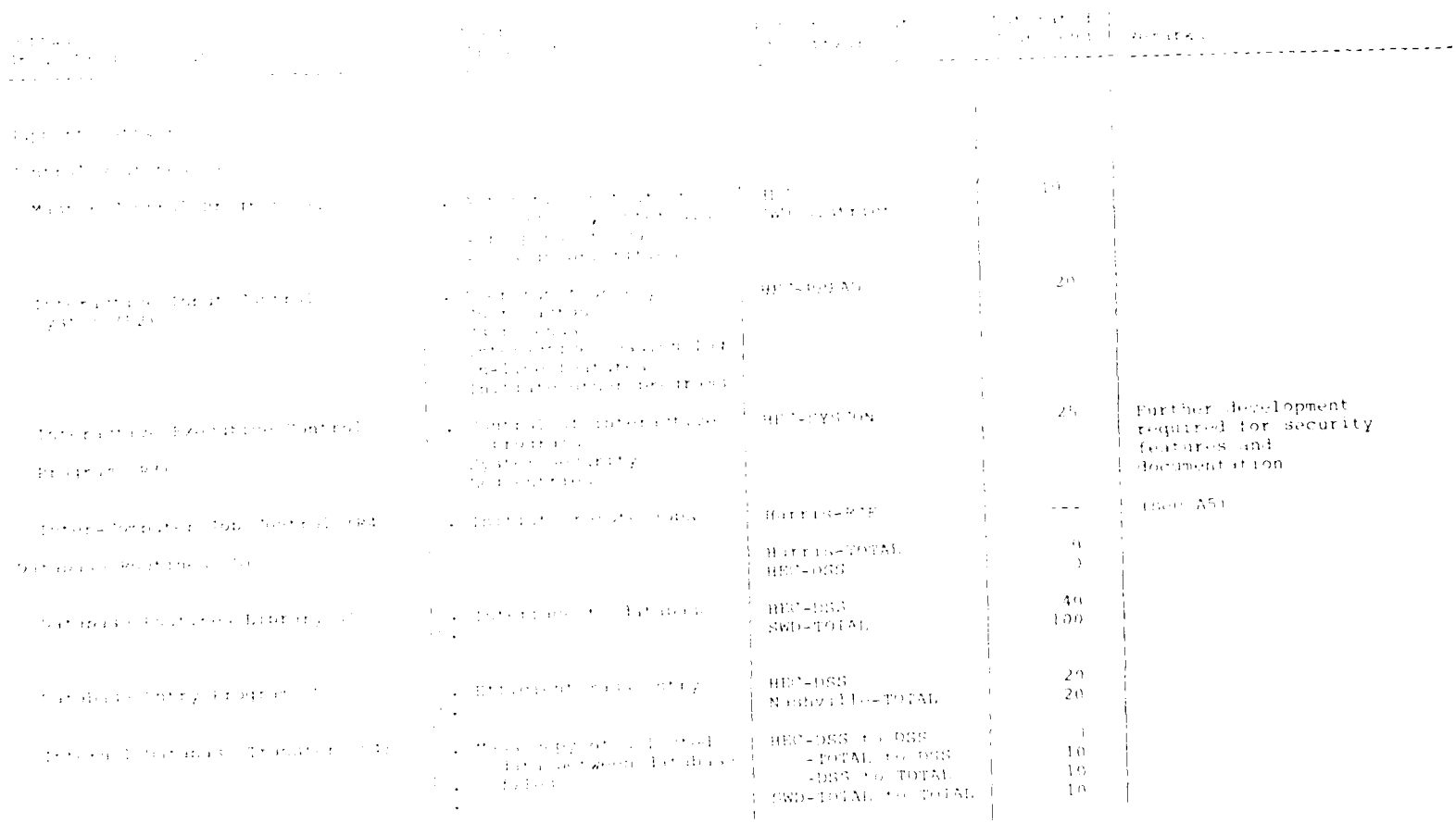

[illegible]	[illegible]	[illegible]	[illegible]	Remarks
[illegible]		[illegible]		
[illegible]	[illegible]	[illegible]	15	
[illegible]	[illegible]	[illegible]	15	
[illegible]	[illegible]	[illegible]	10	
[illegible]	[illegible]	[illegible]	[illegible]	
[illegible]				
[illegible]	[illegible]	[illegible]	15	Within machine only X.25 between machines?
[illegible]	[illegible]	[illegible]	15	Sign-on, sign-off
[illegible]	[illegible]	[illegible]	15	Must be online, machine transferable
[illegible]	[illegible]	[illegible]	25	Resource terminal; within machine only X.25 for between machines
[illegible]	[illegible]		---	See Data Network Link (A5)

[illegible]

VII. TECHNICAL REQUIREMENTS

7.1 General

7.1.1 Purpose. The purpose of this chapter is to present software engineering standards and conventions to be used in the design, coding and checkout of software systems in support of SWD WCDS. The goal of these standards is to increase usability, reliability, testability and maintainability by using advanced design techniques and structured coding, thereby developing software products in compliance with established program budgets and schedules. The applicability of this chapter to existing software shall be determined by the SWD RCC on a case by case basis.

7.1.2 Scope. The scope of this chapter includes: General Standards and Conventions, Design Conventions, Coding Standards and Conventions for FORTRAN Review Procedures.

In this chapter, the words module, subroutine, and function are synonymous and no distinction is intended.

7.2 General Standards and Conventions.

7.2.1 Need for Standards and Conventions. The use of common standards and conventions can significantly reduce both development and life cycle maintenance costs and increase program reliability. Standard design and programing techniques will facilitate modifications that occur during the development/maintenance phase of the life cycle.

As a result of the recent exposition and treatment in technical literature of the concepts and techniques known as "Top-Down Design," "Structured Design," and "Structured Programing," a great deal of attention has been focused on the processes of designing and coding computer programs. In the past, the design of many individual programs evolved as the programer actually coded his assigned functions. The design phase of program development is now recognized to be a crucial factor in determining the reliability and efficiency of the software product. The manpower and time required to implement a given program, as well as life cycle support costs, will be greatly influenced by the design approach and the design alternatives selected.

7.2.2 The Design Process. The following general requirements should apply to the design process:

a. The program design should be carried out as a separate, distinct activity resulting in a clear and comprehensive design specification.

b. The design of each component should be completed and accepted via the review process before coding of that component can commence. This will greatly simplify the coding, testing and further documentation in later stages of the life cycle.

c. For existing programs the designs may be required by direction of the RCC. Beyond these general requirements, specific design standards and conventions maximize the clarity of the design and the eventual reliability and maintainability of the ultimate system. To this end, the software system should have a logical structure with highly localized functions.

7.2.3 Hierarchical Top-Down Program Design. A hierarchical design is, quite simply, one which is structured into levels. The topmost level of the hierarchical structure corresponds to the highest level of control of the task to be performed by the program. Lower levels of the hierarchy, in turn, correspond to low levels and will only be invoked by components at higher levels. Finally, each level of the design must be logically complete in itself and must be of size which can be readily viewed and comprehended. Such design is easier to read and implement, and will lead to a more easily maintainable system, than one consisting of a single large, monolithic program.

The method of top-down design requires that the basic control functions of the system (i.e., the topmost level of the hierarchical structure) be designed first. The flow of control among the modular functions, will then constitute the topmost level of the system. All control functions invoked by the topmost modules will be at the second level, which should be designed next, with the identification of modules at this level also. This process continues down to the bottom level of the program structures.

The high level control components shall be coded first, using dummy statements to represent lower level components.

7.3 Design Standards and Conventions.

7.3.1 Purpose. The purpose of this paragraph is to set forth the standards and guidelines to be used by the WCDS personnel and contractors in design of the WCDS software.

7.3.2 Statement of Requirements.

7.3.2.1 Introduction. The statement of requirements is a written expression of all that a program will be expected to do. It should be as complete as reasonable, understanding that often an iterative process governs the development of a program. The initial concept of the requirement is

expanded as development occurs. As much as possible of this iteration should take place during the preparation of the statement of requirements. If requirements are significantly expanded after functional and detail design or coding has occurred, much effort may be wasted or else the product may be poorly adaptable to the changed requirements. This may result in a heavily patched, poorly performing, difficult to maintain product. A well thought out statement of requirements will conversely contribute to the development of a well performing, easy to maintain product.

Most of the requirements document should become part of either user or programer documentation later in the development cycle. If done properly most sections will need only minor editing to be included in other documentation.

In general, unnecessary "requirements" should not be stated. This will allow the designer greater freedom to produce a well performing product. However, if too few requirements are stated, the designer may have so much freedom that the end product will not meet the need for which it has been developed.

The statement of requirements should include these areas:

Purpose of Program
Capability Requirements
Interface Requirements
Programing Requirements

A sample statement of requirements is given in Figure 7-1.

7.3.2.2 Purpose of Program. The purpose of the program should be stated briefly. It should be approximately a paragraph in length. It should convey the general function of the program. Details should be left to the capabilities section. The purpose statement should be synonymous with the text portion of the program abstract. It should orient a reader to why the program was written, who would use it, what it does, and how it does it in brief terms. Based on the purpose statement an individual is oriented to the material that will follow in the capabilities and interface section of the requirements document. Later the purpose statement will be incorporated into the user and programer documentation and the program abstract.

7.3.2.3 Capability Requirements. The capabilities section contains specific statements of what the program must do. The capabilities section will be used during development to

guide the functional design of the program. This same section could be used later as part of the user documentation to inform the user what the program can do for him. Again, if it is written properly, it will serve both purposes with little or no rewriting.

7.3.2.3.1 Methodology. This section states the engineering methodology that should be included, and the options required. The capabilities statement may be several paragraphs long for a short program, or may be 50 or more pages for a complex program. The capabilities statement may reference commonly accepted techniques. Those less commonly known techniques should be spelled out in detail. For instance, if a rainfall-runoff-routing program were to be developed, the capabilities section may reference that the Clark and Snyder unit hydrograph methods are to be incorporated. Such methods need not be spelled out in detail, because they are commonly recognized within the profession and are defined in available literature.

On the other hand, if a new form of a continuous loss function were to be included, the loss function will need to be defined in detail.

7.3.2.3.2 Assumptions and Limitations. Theoretical assumptions that will be allowed in the application of a methodology must be specified. Limitations of the methods should be stated. Also, the actions the program will take on detecting unusual conditions that are detected, such as encountering missing data, or failure to converge to a solution should be stated.

7.3.2.3.3 Verification. It is good practice to include requirements for specific tests that the software must be able to execute. The tests specified will become criteria by which performance of the program may be tested after development, after modification, and after implementation.

7.3.2.3.4 Interface Requirements. The interface section of the requirements document must define all necessary relationships between what goes on inside the program and the outside world. It must include interfaces to the user and his input data and output results. It must include interfaces to the computer system, disk units, and other devices.

7.3.2.3.5 Input/Output. In most cases it is quite important to state a requirement of how the program should accept input. Normally the specific input structure would be part of the functional or detail design. Likewise the form

of the output should be specified in either a general or specific way. The need for tabular and/or graphic output, devices to be used, different levels of detail in output, and other output options should all be addressed. The requirements for verification (debug) output during development as well as during the life of the program should be specified. Requirements to interface to data bases should be identified.

7.3.2.3.6 System Requirements. Requirements that deal with computer system services should be identified, such as date and time of day, error recovery capabilities, program interrupt, control and operator console communication.

7.3.2.3.7 Programing Requirements. Programing requirements must be stated to define the constraints upon the program coder. These are largely covered by standards set forth elsewhere in this document. Additional requirements on memory size, language constructs permitted or excluded, maximum number of input/output units allowed, etc., may be appropriate. Treatment of error conditions should be specified.

7.3.3 Program Design. The program design should be carried out as a separate, distinct activity resulting in a clear and comprehensive design specification. The design should be performed in two phases. The first phase is general or functional design: a global design of the program components. This phase determines how the program is to accomplish its functional objectives. The second phase is the detailed design phase. This phase determines the specific programing details of how the program will accomplish its work in the programing language and operating system environment it will use. The design of each component must be completed and accepted via the review process before coding of that component can commence.

7.3.4 General or Functional Design Phase. The functional design describes the basic steps involved in the solution procedure in terms unrelated to any programing language. For example, the functional design of a rainfall- runoff model would describe the process of computing runoff from rainfall in terms of the basic mathematical models of the process.

The functional requirements are transformed into program specifications in the "FUNCTIONAL DESIGN" phase, using a structured approach. The structured analysis approach has the following characteristics: (1) It yields a description of the program-to-be, typically using diagrams to communicate ideas; (2) it progresses smoothly in a top-down fashion, from a global, general definition of program components to a detailed, in-depth

description of these components; and (3) it yields a set of connected specifications of the identified program components.

7.3.4.1 Description. A general description of the proposed program is developed prior to its detail design and coding. This defines conceptually the components of the program, the interaction and order of execution of the components, and the required flow of data between components. Diagrams are usually convenient for presenting this portion of information. All data manipulation and computation techniques are defined in sufficient detail to permit the detail program designers, and subsequent program users to recognize the subdivision of tasks accomplished by the program, to locate the components in which the tasks are accomplished, and to understand the computational techniques and algorithms employed. These goals are best met using the top-down design technique described herein. The general format of input and output is especially critical, and its design should be included at this stage of program development. A preliminary input guide should be developed, and output report forms should be defined. Potential program users should be consulted to verify the practicality and availability of the input and the utility of the output.

7.3.4.2 Top-Down Design. Top-down program design begins with firmly established program requirements for tasks to be accomplished by the program and with definition of the data required to accomplish the tasks and progresses to description of program components. The overall program structure (top- level) is defined, and lower-level components of the program are defined in progressively increasing detail.

Figure 7-2 illustrates the organization of the top level of a program developed for dredged-material disposal management. This program consists of three major computational components, controlled by an executive routine. Component 2.0 reads the user's data and manages it for subsequent use by component 3.0. The order of input and formats used are defined by the previously developed input guide. Additional information, if required for program development, is provided by additional diagrams, as is the case with component 3.0. Component 4.0 formulates and prints various reports of system operation and of the efficiency of the capacity expansion options. The formats of these reports are established earlier with cooperation of potential users. Figure 7-2 also shows the expanded representation of component 3.0, presenting in more detail the tasks

performed by this capacity expansion model; for convenience these are identified as 3.1, 3.2, and 3.3. Figure 7-3 describes component 3.3 in more detail, with a breakdown of the computations necessary to compute the cost of a capacity expansion plan. The critical task here is computation of the present value of operation costs.

7.3.4.3 Specifications. Each of the components defined in the structured analysis is translated into one or more subprograms that perform independent, single tasks. The advantages of this approach are: (1) the task of coding can be separated; (2) complex programs can be tested and verified in parts; (3) the resulting code is easier to understand and maintain; (4) the resulting code is flexible and can be modified by changing single modules independently; and (5) documentation of the code is easier. Items 1 and 2 are critical if time constraints demand quick development of production- grade programs. In such a situation, coding and testing the various modules can be assigned to a number of individuals who can work simultaneously and independently. Also if budget constraints dictate postponement of development of certain capabilities, this also can be accomplished. For example, development of the previously described dredge disposal management model was planned and funded in two stages: stage one included only development of a model that would define the minimum-cost operation policy, while stage two addressed the capacity expansion problem in detail. Thus in stage one, component 3.1 was coded as a "dummy" subroutine, and only a user-specified plan was considered. Nevertheless the data transfers and the required results of execution were defined. At the completion of stage two, component 3.1 was defined in more detail and additional diagrams were developed to illustrate the components required to determine the next plan to be evaluated. Items 3, 4, and 5 are significant given the environment within which the computer code must be used. Although program development is generally motivated by a single application, other applications are common. Typically these applications require special-case modifications which must be performed in the absence of the original program designer or programer. If the program code is developed from the structure diagrams with separation of the components, modification or replacement of the components is easier.

7.3.5 Detailed Design Phase.

7.3.5.1 Scope of Detail Design. The detail design phase takes as input the functional design of the program

components. The output from the detail design will show how the general descriptions contained in the functional design will actually be implemented on the computer. The detail design must consider modularization of the functions into specific routines. It must indicate the algorithms to be used within the routine, as well as internal communication between itself and other applications and systems routines and external interfaces with I/O device (including operators console, if applicable). All file or data bases used by the program must be specified and their contents defined. This will greatly facilitate system integration, testing and maintenance.

All global data items necessary to carry out the functions of the program should be identified and described. Global data refers to that data which are required by two or more subroutines and can include for example: constants, indexes, flags, variables and tables. Data items should be identified by name, data types, values (extremes and nominal), units (degrees, feet/sec., etc.) and usage (where used, set). Additionally, collective data areas (tables, common blocks, data records) should be described.

7.3.5.2 Detail Design Methods. The detail design must be expressed in a manner that clearly conveys to the programer how each routine will perform. Several tools have been advocated to express the detail design of a routine. Possible methods are:

a) English text description

b) Flow charts

c) Warnier-Orr diagrams

d) Pseudo-code

e) combinations of above

The project leader should determine the method to be used for the development of a given program. The particular method used is not significant. What is significant is that the expression of the detail design be clear, complete and understandable by others so that it may be reviewed, implemented, and maintained effectively.

7.3.5.3 Modularity. Modularity, in this context, is described as the development of interrelated, individual functional units which can be independently tested. A module shall have a single entry and exit point, thus making the usage predictable each time it is called.

Modularity is achieved by dividing a program into its functional component modules and further dividing them into smaller functional units as necessary. It must be emphasized here that the concept of design by modular structure is applicable at all design levels.

The key characteristics of the modular approach is the maximum independence it affords one functional component from others. Each program component should consist of a contiguous group of statements having a single external identifier.

The necessity for modularity arises from a number of factors related to manageability, efficiency, maintainability, and reliability:

a. Manageability is improved by modularity which allows programers to implement and test different program components in parallel. This permits many programers to be assigned to a single project, thus shortening software development time.

b. Efficiency is improved because a function required throughout the system can be assigned to a single program component, which is implemented and tested just once. This not only eliminates duplication of effort, but also reduces function storage requirements because only a single copy of each function needs to be stored.

c. Maintainability is improved because a modular program is more understandable than a monolithic program. Changes in a given function are more likely to be localized to a single function. Modularity improves the readability of a program by simply dealing with a few lines of code.

d. Reliability is improved because errors are more isolated. Therefore, they are easier to pinpoint and correct and often only affect the operation of one functional area.

7.4 Code Development.

7.4.1 Allowable Programing Languages.

a. The current standard for FORTRAN is ANSI X3.9-1978 commonly known as FORTRAN 77. This standard should be used for all newly developed programs. Extensions to the language that are offered should not be used except those directly accessing data bases or communications devices.

b. Programs should be written such that they may be executed on other computer systems with a minimum amount of conversion effort. Limited use of critical language features is encouraged. (See Appendix I.)

c. Previously existing programs undergoing modification may continue to be developed under FORTRAN IV ANSI X3.9-1966, using the new standard where practical.

d. No use should be made of BASIC, COBOL, PASCAL, ADA, PL1 or any other language, without written approval of the RCC (Figure 7-4).

e. For generalized programs, no assembly code routine or imbedded assembly code should be used in any FORTRAN program or subprogram.

f. For specific dedicated programs, or communication routines, that require assembly code programing, the assembly code should be isolated in a FORTRAN callable subprogram. Only those functions actually requiring assembly code shall be programed in assembly code. The RCC shall approve all routines written in assembly code prior to their development (Figure 7-4).

g. Code should be written so that programs can be easily read by individuals without extensive programing skills.

7.4.2 Programing Conventions and Standards. Herein the terms subprogram, module and routine are used to refer collectively to subroutines, functions and block data routines.

7.4.2.1 Programs. A program consists of a main program and an optional collection of subprograms (i.e., subroutines, functions, library routines).

a. The preamble of the main program should contain:

(1) Purpose of program.

(2) Developer of program, address, phone number, date.

(3) Unit number and purpose of all I/O units used within the program (indicate whether formatted or binary and maximum record length).

(4) Name and purpose of each subprogram used within the program (shown in alphabetical order).

(5) Routines calling each subroutine.

(6) Routines called by each subroutine.

(7) Common block location, length used, referenced by each subroutine.

b. Arrange program code with main program first, blockdata routine second; if present, then all subprograms in alphabetical order.

c. The program should contain one unlabeled STOP statement in the main routine for normal program termination. Where additional STOP statements are required for termination of fatal error conditions, STOP statements with unique octal labels should be used.

7.4.2.2 Subprograms. A subprogram is a subroutine or function called by a main program or another subprogram. See Figure 7-5 for sample subroutine.

a. The preamble to the subprogram should contain:

(1) Purpose of subprogram.

(2) Name, address, phone number of developer.

(3) Name and definition of all parameters (in order within subprogram statement). This should reflect variable type, input/output parameters or both, use, units, etc.

(4) Unit number and purpose of all I/O units referenced.

(5) Name and purpose of each subprogram referenced.

(6) Name and purpose of each common block referenced.

(7) Original development date.

(8) Revision log containing for each revision: the revision date, purpose of revision, and revision author.

b. Routines should average about 150 statements (about 3 pages) including comments and should not exceed 250 statements. As a general rule, the smaller the component, the easier it will be to read, comprehend and maintain.

c. Each subprogram should perform only one task.

d. There should normally be only one entry location in a subprogram.

e. There should normally be only one exit location in a subprogram.

f. Subprograms should have the responsibility for performing positive validation of parameters passed to it. For instance checks for type, range, sign, dividing by zero and exceeding dimension limits should always be made.

g. Where errors are detected by a subprogram, control should be returned to the calling routine with the error condition indicated. Where only the calling routine has the necessary information (i.e., dimension limits), the calling routine should perform appropriate checks on parameter values before passing them to a subprogram.

h. Upon return from a subprogram the line immed following the call should be the next line exe No alternative returns should be used.

i. Where variable dimensions are used in a subprogram the dimension limits should be passed through the call statement as parameters.

j. To increase modularity, minimize the use of common statements to pass operational parameters. Data should be transferred through subroutine arguments as much as possible. Use common only for passing limited control information, such as a debug switch and debug I/O unit number.

k. Functional duplication should be avoided when only the interface is unique. For example, a single mathematical algorithm should not be embedded in more than one module when only I/O data dependency is unique. Instead, the common single function should be selected for use with the appropriate interface routine.

l. Subroutines should not contain blocks of code (more than 4 or 5 lines) which could stand alone or that could be used by other subprograms.

7.4.2.3 Subprogram and Variable Names.

a. The name chosen for a variable subprogram should be meaningful to its use.

b. Variable and subprogram names should not exceed 6 characters.

c. Temporary variable names should be obvious: TEMP, for example. Reuse temporary names as appropriate.

7.4.2.4 Style. This section describes programing procedure requirements intended to provide consistency in code development and expedite future modifications.

a. No assumption should be made as to prior contents of memory locations. Therefore, all variables and arrays should be initialized to appropriate values.

b. Statement numbers should:

(1) be local to each subprogram;

(2) increase from beginning to end of routine with increments of at least 10 to allow for future inserts; and

(3) be right justified in columns 2-5.

c. No assumption should be made as to the relative word length of real, integer or other type variables. An integer variable should not be assumed to be the same word length as a real.

d. Statements appearing in Figure 7-6, labeled with a # sign, should be avoided.

e. Real number computations should contain no more than 10 significant digits and have exponents in the range of -30 to +30.

f. Integer numbers should be in the range of -8,000,000 to +8,000,000.

g. Parentheses and spaces that contribute to readability should be used.

h. Calls to subprograms should be set off by appropriate comment spacing for improved readability.

i. Approximately 25 percent of program source code should be comments clearly describing and documenting the code. Comments should enhance the readability of the code, and should be structured within the program so that they are readily seen by consistently beginning in a specific column and by separation from lines of code with blank comment lines where appropriate.

j. Comments should be used to explain the code so that someone other than the original programer can easily follow the program logic.

7.4.2.5 Input/Output (I/O). This section describes the input and output specifications to be applied during the program development phase.

a. The I/O unit number should appear in the appropriate statement as a simple variable when reading or writing data. For example:

```
WRITE (LINEPR,20) X,Y,Z
```

b. Unit numbers should be in the range of 11 to 99 to enable easy program transportability. Variables used for I/O unit numbers should appear in a separately labeled common block, and should be initialized in a block data subprogram.

c. PRINT and READ statements without a unit number specified should be avoided. These statements use default unit numbers that differ from machine to machine, making the results different in various systems.

d. Unit 6 should be the default standard output unit to receive normal output, debug output and error messages.

e. FORMAT statements used more than once should be grouped together either before the first executable statement or after the last executable statement in the routine. FORMAT statements used only once should appear immediately following the I/O statement that utilizes it or along with multiple-use FORMAT statements.

f. Input data should be checked for validity at input time. Invalid data should be reported and processing should continue wherever possible. Where feasible, separate data checking options should be developed to minimize execution time for previously checked data sets.

g. Standard width fields should be used for fixed format. Free format input should be used as much as possible. Input should be designed for ease of the user, not for ease of the programer. Input should be easy to proofread.

h. On input END=, branch should be used for end of file detection. On input ERR=, branch should be used for input data error detection.

i. Input and output should be localized in separate subprograms wherever possible.

j. Internal I/O should be isolated in subprograms wherever possible. FORTRAN 77 internal file using a CHARACTER variable should be used in preference to ENCODE and DECODE.

k. Output record length for print files normally displayed on a line printer should be up to 132 characters including carriage control. Print file output record length for files normally displayed on interactive terminal should be up to 80 characters, with optional 132 characters.

7.4.2.6 Alphanumeric Data.

a. Alphanumeric data variables should be initialized only by the DATA statement or READ statement. Hollerith specification (i.e., n H....) should appear only in DATA statements or FORMAT statements. It should not appear in CALL, IF or any other statements. DATA statements setting alphanumeric data should be of the following form.

```
DIMENSION INUM (3)
DATA INUM,IB/4H1234,4H5678,4H90AB,1HB/
```

b. The use of single quotation marks (') to delimit strings should be restricted to FORMAT statements only.

7.4.2.7 Control Structure.

a. All newly developed programs should conform to the rules of structured programing. Structured programs not only enhance readability and control, they simplify both the programing and maintenance functions. Structured programs use only the five standard constructs: SEQUENCE, IF... THEN... ELSE, DO WHILE, DO UNTIL and CASE. Unconditional branching statements (GO TO) are limited to instances where they are needed to implement one of the above constructs and may only be used to pass control forward.

b. When loop indexes are associated with dimension limits, variables should be used for the index limits.

c. Flow of subprogram should be from top to bottom.

d. Checks for real number equality in IF statements should be avoided.

7.4.2.8 Debugging/Error Messages.

a. Debug messages should identify the subprogram and location outputting the message.

b. Debug should normally be controlled by variables in a separate Trace and Debug control common block.

c. Debug messages should normally be directed to I/O unit 6.

d. Error messages should be grouped near the end of the executable code of a routine, immediately prior to the RETURN or STOP statement. They should also indicate the name of the detecting routine, and nature of the error.

7.4.2.9 Specifications Statements.

a. Specifications statements should occur in the following order.

(1) Implicit [i.e., IMPLICIT INTEGER (A-Z)]

(2) Type (i.e., REAL, INTEGER)

(3) Dimension

(4) Common

(5) Equivalence

(6) External (i.e., EXTERNAL SIN)

(7) Data

b. DATA statements used to initialize data in labeled common blocks should be placed in a separate block data subprogram.

c. The PARAMETER statement must occur before any specification statement that makes reference to it. The PARAMETER statement should be used to set dimension limits and associated constants wherever possible.

d. Specifications that are identical in several subprograms should be stored once and inserted into each routine at compilation time.

7.5 Program Testing.

7.5.1 Test Plan. A test plan should be developed and should include a minimum of two test cases. One case should use correct input and the other incorrect input data. Both test cases should be designed to test all phases of the module. This plan should be included in the preliminary design review (paragraph 7.8.3).

7.5.2 Individual Module Testing. The test cases should be processed by the individual module prior to incorporating the module into the composite program.

7.5.3 Composite Program Testing. Upon successful completion of the individual module testing, the module should be incorporated into the composite program and the test cases incorporated into the composite test cases. The composite program should then be executed with all composite test cases to validate the interface. The test plan, individual module test results and the composite test results should become part of the final review (paragraph 7.8.6).

7.5.4 Standard Test Data. A listing of the correct composite test case should be included in the user manual and accompany the source file during distribution.

7.6 Documentation.

7.6.1 General. All of the documentation as described below, excluding charts, should be maintained within the WCDS and distributed along with the program.

7.6.2 Development Documentation. The following documentation should be maintained during the software development. These documents should be available during the reviews as described in paragraph 7.8.

a. Statement of Requirements

b. Functional Design Specifications

c. Detailed Design Specifications

d. Test Case Specifications

This documentation should be maintained such that it may be incorporated into the User and Programers' Manuals with very little modification.

7.6.3 User Manual. The user manual is to provide the user with information on:

a. Purpose of program

b. Methodology used

c. Capabilities

d. Assumptions and limitations

e. Data requirements

f. Optional capabilities

g. Program input

h. Program output.

7.6.4 Programer Manual. The programer manual should include:

a. Functional Design

b. Detailed Design

c. Test Case Specifications

d. Source Program listing

e. Variable Definitions

f. External Definitions

g. Variable Cross-Reference Usage

h. External Cross-Reference Usage.

7.7 Program Maintenance.

7.7.1 Program Library. A program library should be maintained by the Dallas Site Manager. The library should contain the following items on appropriate media:

a. Status of all modules which have been uniquely identified.

b. Designer responsible for each module.

c. Statement of requirement for each module.

d. Program version source module.

e. Descriptions of module additions and changes limiting program versions

f. Program variable cross-reference listings

g. Change orders for each module

h. Uses/Usage by lists for each module.

It is anticipated that the program library can be maintained on a manual basis.

7.7.2 Change Orders and Error Reports. Request for program changes and error reports should be submitted to the Chief of the SWD RCC in writing. The request should contain:

a. Name of module or program

b. Detailed description of problem or requested change.

c. If an error report, inclose any information that could aid in reproducing or determining the cause of the problem such as input being processed, error prints, core dumps, etc. The RCC and the program developer should evaluate the request as to its impact on other software. The request should be incorporated into the project schedule for work assignments. The request shall be incorporated into the software unit file.

7.7.3 Program Modification. The same review guidelines should apply as stated above for new development. The following should be updated to reflect the modification.

a. Requirements Statement

b. Functional Design

c. Detail Design

d. Coding

e. Test Plan

f. Test Cases

g. Users Manual

h. Programers Manual

i. Software Unit File

The following Dallas program library files should be updated to reflect the date of the modification, author and nature of modification:

a. Statement of Requirements

b. Program version source module

c. Description of module additions and changes

d. Program variable cross reference listing

e. Change order file.

7.8 Review Process.

7.8.1 General. Reviews are conducted to provide insights into other design and development efforts and enable program developers to interface with both supervisory and peer personnel.

The level of review may be internal to the SWD RCC, district branch, district section, peer walkthroughs or formal committee depending on the stage of development. The review procedures relate to both new programs modifications to existing programs. Small projects may waiver the design and code development review steps. The review process is completed with the second formal review. The SWD RCC should maintain a unit software file of all projects. Upon completion of a formal review the head of the review panel shall forward a copy of the review scheduling (Figure 7-7) and review recording (Figure 7-8) forms to the Chief of the SWD RCC for entry into the unit software file.

In addition to the reviews themselves, the following monitoring techniques should be applied. At least once a month the total project plan should be reviewed by the Chief of the SWD RCC. Changes and successively lower level definitions of detailed subtasks to be accomplished and related end products should be incorporated. These will be reflected in changes and expansions to the project milestone schedules and work assignments. The above information (including the identification of problems and planned method of resolution), will form the substance of a monthly progress report to the Chief of the SWD Water Management Branch and all of the District Branch Chiefs.

7.8.2 Small Project Review Procedures. Special review procedures for small software development projects may be requested by the responsible District Section Chief at the completion of the Statement of Requirements. Small projects are defined as new or revised tasks normally completed in two or three person weeks of effort. The abbreviated review procedure requires only the final formal review step requesting acceptance of the completed project. The request for waivering the interim review steps should be made to the head of the formal review committee. A response is required within 3 working days.

7.8.3 Preliminary Design Review.

7.8.3.1 General.

The purpose of the Preliminary Design review is to evaluate the basic design approach prior to proceeding with the detailed design. The review is conducted to determine whether the design approach meets the Statement of Requirement specifications and if all of the interface requirements are appropriate. The review should be held when the design has progressed to the point where functions have been allocated to program modules, and operation diagrams are completed.

The review shall be conducted by a "peer group" comprised of personnel outside of the personnel responsible for the project. The review personnel shall consist of one or more people familiar with the type of study (project management oriented knowledge) and computer analyst's skills. The residing Head of the formal review committee shall designate the peer level review constituents. Detailed design cannot be initiated without the concurrence of the peer review group.

7.8.3.2 Review Information. The following information must be provided to the reviewers 3 days prior to the meeting:

a. A copy of the Statement of Requirements from the software unit file and any proposed revisions to the document.

b. Structure "top-down" design diagrams showing proposed input, output, and analysis procedures.

c. Preliminary performance.

d. Proposed testing procedures.

7.8.3.3 Review Process.

The review should confirm that the presented computer program design satisfies the Statement of Requirements. It should uncover and resolve incompatibilities and inconsistencies among functional and physical interfaces. The review should also address the test verification requirements and any other critical issues that ultimately may affect the operation of the software. Detailed design may be initiated after satisfactory approval of the "peer" review group.

The material documenting the preliminary design work effort shall be submitted to the Chief of the SWD RCC for insertion into the unit file for the program. This includes the revised Statement of Requirements, top-down design diagrams, and other pertinent text, notes, charts, tables and figures.

7.8.4 Detailed Design Review.

7.8.4.1 General.

The detailed design review is a technical review of the final software design and draft documentation prior to initiation of the coding and testing phases of software development. The review is the first of two formal reviews.

The review panel shall be comprised of site personnel outside the section where the development is occurring. The panel should be familiar with the overall purpose and scope of the specific or similar project, and have computer analysts and programing skills. The head of the review panel typically should be of a Section Chief level. The code development phase cannot be initiated until approval to do so is granted by the head of the formal review panel.

7.8.4.2 Review Information. The development personnel shall provide the following information to the formal review panel at least 3 days prior to the scheduled review meeting.

a. The updated Statement of Requirements (may be part of the draft documentation).

b. Text, charts, schematics, notes, etc. describing in detail the design of the program to be implemented. This includes top-down structure design diagrams for input, output and analysis procedures. Psydo-code may be used to detail each program module.

c. A good working draft of the programer's (system) and user's manuals should be provided. The manuals should include all aspects except final testing outputs.

7.8.4.3 Review Process. The review should be of the material presented and accomplish the following:

a. Establish that the design procedures specified satisfies the Statement of Requirements;

b. system compatibility exists by reviewing all block diagrams, schematics, and logic diagrams;

c. all design changes specified during previous reviews are met; and

d. proposed documentation and test procedures are to the appropriate scope and focus.

The head of the formal review panel shall submit all pertinent materials to the Chief of the SWD RCC for inclusion into the unit file for the program. The materials will include: draft documentation materials, schematics, diagrams, and other appropriate materials.

7.8.5 Code Development Peer Review.

The purpose of the peer review or "walkthrough" of the actual computer code is to assure compatibility with the detailed design specifications and the development of the appropriate level and quality of code. This review should be conducted prior to actual testing of the program. In addition to discovery of errors in coding, interfaces, and implementation specifications the peer review also reduces supervisory dependence on the individual programer's work.

The review panel shall consist of one or more computer analysts or programers outside of the section responsible for the development. The reviewers are appointed by the head of the formal

review panel and may or may not be part of that panel. The reviewers shall submit a written (handwritten) notice to the head of the formal review panel when the peer review is completed. The message in turn will be forwarded to the Chief of the SWD RCC Center for inclusion into the unit file for the program.

7.8.6 Final Review.

7.8.6.1 General. The final review shall be conducted by the formal review panel. It will review all documentation, test results, code, and the final Statement of Requirements to assure compliance with specified purposes and objectives. The program is available for distribution after satisfactory completion of this review.

7.8.6.2 Information Presented. The following information shall be provided to the formal review panel 3 days prior to the scheduled review.

a. The unit file for the program from SWD RCC.

b. Revisions to Statement of Requirements and detailed design occurring since the previous formal review session.

c. Final draft users and programer's manual documentation (5 copies).

d. Test files, input/output requirements and test results.

7.8.6.3 Review Process. The formal review panel should review all documents to assure they meet the software development guidelines and the overall SWD quality standards. A detailed review of test results, inspection of input/output formats should also be performed. After satisfactory completion of the review, the head of the formal review panel shall submit a copy of the final draft of the Programer and User Manuals to the Chief of SWD RCC for approval and inclusion in the software unit file. The unit file should then be sent to the Chief of the SWD Water Management Branch for final approval. The software unit file should be returned to the Chief of the SWD RCC for permanent filing. After final approval, the project manager should incorporate the source program, sample data file and documentation files into the source program library on the Dallas System for distribution.

SAMPLE STATEMENT OF REQUIREMENTS

Program: THEISS

I. Statement of Requirements

1. Purpose

This program will compute the basin average precipitation for a watershed. It is used by engineers and hydrologists to provide precipitation input to hydrologic models. A network of up to 20 precipitation stations may be used for any number of time periods.

2. Capability Requirements

a) The Theissen method for precipitation weighting will be used.
b) A variable number of precipitation stations up to a maximum of 20 may be used.
c) Multiple subbasins may be analyzed.
d) There is no limit to the length of record of the precipitation data.
e) All precipitation data will be provided in the same time interval.
f) A test of 3 subbasins, 20 precipitation stations for 2 years of 2 hour data will be used.

3. Interface Requirements

a) Precipitation data may be supplied as part of the input stream or may be obtained alternately from an HECDSS data file.
b) Theissen factors for each subbasin will be provided as part of the input stream.
c) Both free form and fixed field input will be provided.
d) Fixed field input will conform to HEC standard - A2,F6.0.,9F8.0 - format.
e) Output will be provided in 80 column and 132 column forms at user option.
f) Optionally input precipitation data may be displayed in the output file.
g) Output basin average precipitation may be tabulated, written to a sequential file in HEC-1 precipitation format, or written to HECDSS file at user option.

4. Programming Requirements

a) The program must be written for maximum transportability.
b) Target systems include CDC, IBM, Univac, DEC, Harris, Prime and Data General.
c) Execution program size should not exceed 256 K bytes for data space and 192 K bytes for code space.

FIGURE 7-1

SAMPLE STATEMENT OF REQUIREMENTS

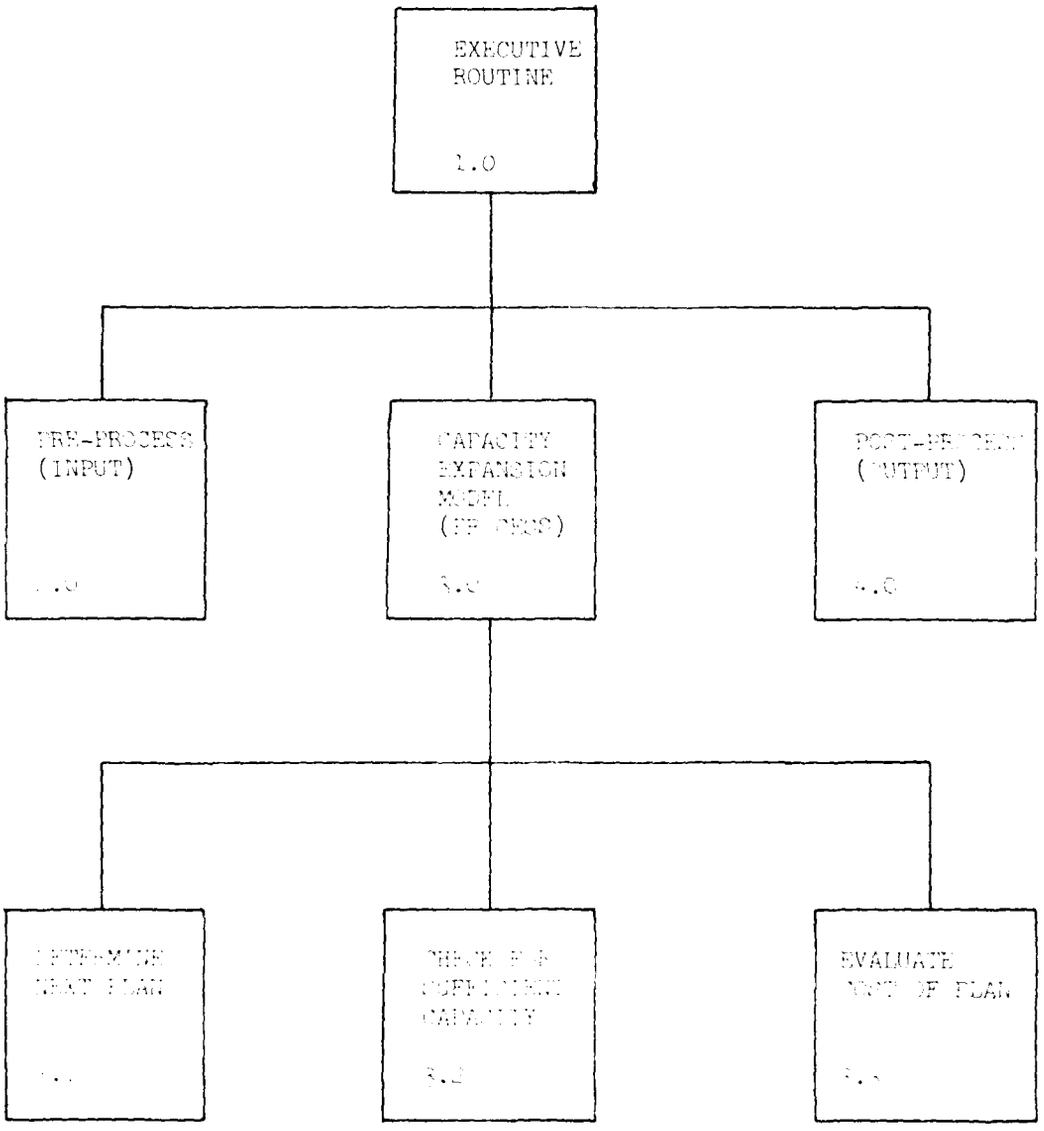
EXECUTIVE ROUTINE
1.0
PRE-PROCESS (INPUT)
CAPACITY EXPANSION MODEL
(OUTPUT)
EVALUATE

[illegible]
[illegible] WN PROGRAM

[illegible]

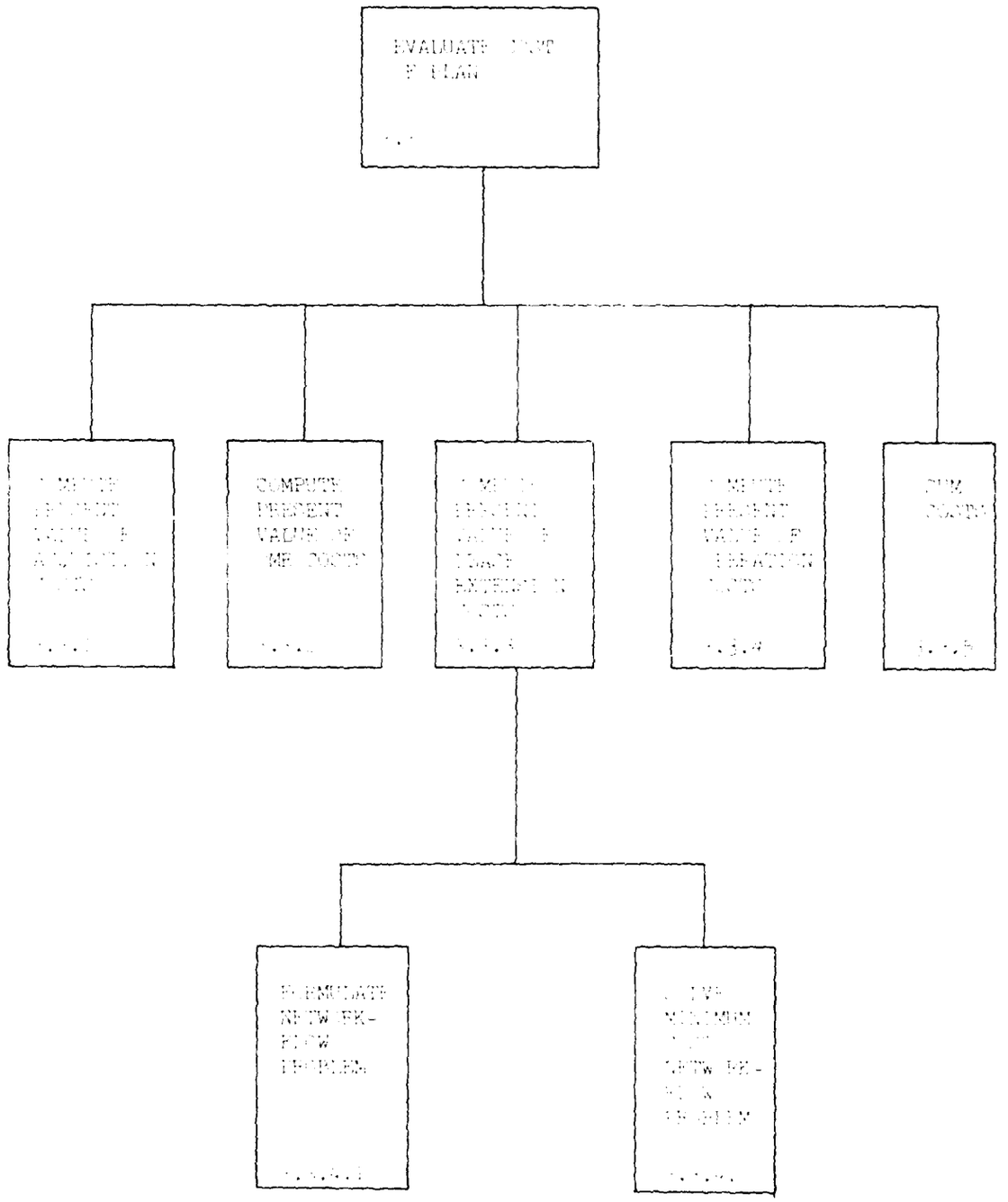

FROM:
TO: SWD RCC

SUBJECT: Standards and Conventions; deviation from

Reference: Software Design Manual paragraph(s) ____

1. Justifications and Reasons. Reasons why standards cannot be used, including supporting documentation.

2. Modules Affected. List of all programs that will be affected by this waiver.

3. Proposed Substitute(s). The supporting rational, documentation, etc., to show that the proposed substitute(s) meet the requirements.

4. [illegible] Support. Compare cost, performance and schedule of proposed substitutes to using the required standards.

Waiver Request Form

Figure [illegible]

SAMPLE SUBROUTINE

```
      SUBROUTINE STRMOV (IA,JA,NA,IB,JB)
C     ------------------------------------------------------------
C     |
C     |  PURPOSE: MOVE A STRING OF CHARACTERS FROM ONE ARRAY TO
C     |           ANOTHER
C     |
C     |  AUTHOR: JOHN DOE, SOUTHWESTERN DIVISION, C OF E
C     |  PHONE:  FTS 222-2222
C     |
C     |  ORIGINAL DEVELOPMENT: FEB. 83
C     |
C     |  VERSION: III - REVISED 3/10/83
C     |
C     |  REVISION LOC: LOG*STRMOV
C     |
C     |-----------------------------------------------------------
C     |
C     |  IA - ARRAY CONTAINING STRING TO BE MOVED.
C     |  JA - STARTING CHARACTER POSTION IN IA OF STRING TO BE MOVED.
C     |  NA - NUMBER OF CHARACTERS TO BE MOVED.
C     |  IB - ARRAY INTO WHICH MOVED CHARACTERS SHOULD BE PLACED.
C     |  JB - STARTING CHARACTER POSTION IN IB AT WHICH TO PLACE
C     |       CHARACTERS
C     |
C     |  EXTERNALS: GETCR - GETS CHARACTER FROM IA.
C     |             PUTCR - PUTS CHARACTER IN IB.
C     |
C     ------------------------------------------------------------
C
C***  SET INTIAL OUTPUT POINTER
C
      J=JB-1
C
C***  SET LOOP LIMIT
C
      NMAX=JA+NA-1
C
C***  RETURN IF NULL LENGTH STRING
C
      IF (JA .GT. NMAX) GO TO 10
C
C***  BEGIN LOOP TO MOVE ONE CHARACTER FROM IA AND PLACE IN IB.
C
      FOR I=JA,NMAX
        J=J+1
        CALL GETCR (IA,I,ICH)
        CALL PUTCR (IB,J,ICH)
      END FOR
C
C***  MOVE COMPLETE
C
   10 RETURN
      END
```

FIGURE 7-5

SAMPLE SUBROUTINE

FORTRAN STATEMENTS

Allowable Statements and forms

In describing the form of FORTRAN statements, the following conventions and symbols are used:

(1) Special characters from the FORTRAN character set, uppercase letters, and uppercase words are to be written as shown, except where otherwise noted.

(2) Lowercase letters and lowercase words indicate general entities for which specific entities must be substituted in actual statements. Once a given lowercase letter or word is used in a syntactic specification to represent an entity, all subsequent occurrences of that letter or word represent the same entity until that letter or word is used in a subsequent syntactic specification to represent a different entity.

(3) Brackets, [ ], are used to indicate optional items.

(4) An ellipsis, ... , indicates that the preceding optional items may appear one or more times in succession.

(5) Blanks are used to improve readability, but unless otherwise noted have no significance.

```
#ASSIGN
*BACKSPACE u
*BACKSPACE (alist)
 BLOCK DATA [sub]
#BUFFER IN (u,iolist,name,mode,words,status[,n])
#BUFFER OUT (u,iolist,name,mode,words,status[,n])
 CALL sub [([a [,a]...])]
*CALL STATUS (cilist)
*CHARACTER [*len[,]] nam [,nam]...
 CLOSE (cllist)
 COMMON [/[cb]/]nlist[[,]/[cb]/nlist]...
 COMPLEX v [,v]...
*CONTINUE
 DATA nlist/clist/ [[,]nlist/clist/]...
*DATAPOOL /nlist/clist/ [[,] /nlist clist]
 DIMENSION a(d) [,a(d)]...
 DO
*DO s [,] i=e1,e2,[,e3]
 DOUBLE PRECISION v [,v]...
 ELSE
 ELSE IF (e) THEN
 END
 END FOR
 END IF
```

FIGURE 7-6

FORTRAN STATEMENTS
PAGE 1 OF 2

```
*END LOOP
 END WHILE
 ENDFILE u
 ENDFILE (alist)
#ENTRY en [([d [,d]...])]
 EQUIVALENCE (nlist) [,(nlist)]...
 EXIT DO [if(e)]
 EXIT IF
*EXIT LOOP
 FOR v=e1,e2[,e3]
 EXTERNAL proc [,proc]...
 FORMAT fs
 fun ([d [,d]...]) = e
 [type] FUNCTION fun ([d [,d]...])
#GO TO i [[,](s [,s]...)]
*GO TO s
 GO TO (s [,s]...)[,] i
#IF (e) s1, s2, s3
*IF (e) st
 IF (e) THEN
 IMPLICIT typ (a [,a]...)
 INQUIRE (iflist)
 INQUIRE (iulist)
 INTEGER v [,v]...
 INTRINSIC fun [,fun]...
 LOGICAL v [,v]...
*LOOP [(e)]
 OPEN (olist)
 PARAMETER (p=e [,p=e]...)
#PAUSE (n)
*PRINT f [,iolist]
 PROGRAM pgm
#PUNCH f [,iolist]
#PUNCH [*] [,iolist]
#PUNCH [-] [,iolist]
*QUADRUPLE PRECISION v [,v.....]
 READ (cilist) [iolist]
*READ f [,iolist]
 REAL v [,v]...
*RETURN
 REWIND u
 REWIND (alist)
 SAVE [a [,a]...]
*SPECIAL COMMON [nlist [,nlist....]]
 STOP [n]
 SUBROUTINE sub [([d [,d]...])]
 UNTIL (e)
 v = e
 WHILE (e)
 WRITE (cilist) [iolist]


#  Not allowed
*  Restricted use only
```

FIGURE 7-6

FORTRAN STATEMENTS
PAGE 2 OF 2

DATE:_____

From: Coordinator:

Subj: Design/Code Review; Project_____Module_____

Ref: (a) Project Development Standards, Conventions, and Methods Document.

Encl: (1) Statement of Requirements
(2) Change Request
(3) Detailed Design
(4) Test Cases
(5) Program Listing (if Code Walkthrough)
(6) Other references.

1. The subject review will be held as follows:

DATE_____TIME_____DURATION_____PLACE_____

PARTICIPANT	RESPONSIBILITY
_____	PRESENTER
_____	COORDINATOR
_____	REVIEWER
_____	REVIEWER

2. The agenda is as follows:

a. Review of Product by Presenter

b. Reviewers Comment on Product

c. Present Test Cases

d. Develop Final Action List

e. Complete review Recording Form

Review Scheduling Form

Figure 7-7

DATE _____

REVIEW RECORDING FORM

PRODUCT NAME _____ INDICATE TYPE OF REVIEW: PRELIMINARY DESIGN
DETAILED DESIGN
FINAL

PARTICIPANTS	RESPONSIBILITY
_____	PRESENTER
_____	COORDINATOR
_____	RECORDER
_____	REVIEWER
_____	REVIEWER

DECISION: _____ accept product as is

_____ revise (no further review)

_____ revised and schedule another review

ACTION LIST: (identify actions by universal name, if appropriate)

Review Recording Form

Figure 7-8

VIII. SCHEDULE AND FUNDING

8.1 General. The development of the SWD WCDS to its full design capability will not be complete until the software described in this manual is developed and installed on the system. The time to reach this design level could range from 4 to 6 years depending on the availability of resources. The estimated cost of software development for the system is about $1.3 million ($889,000 applications and $460,000 support software as shown in Figures 6-1 and 6-2). This represents about 280 man-months of effort. In addition, the estimated manpower requirements for building the master data bases and the basin model calibration files for the system will require between 100 to 150 man-months of efforts.

8.2 Management.

8.2.1 System Management. The Chief of the SWD Water Management Branch will coordinate the development of the various programs/software which collectively form the system of software for the WCDS.

a. Development of Proposals. The field offices (districts) shall submit plans for development of any portion of the system to the Chief of the SWD Water Management Branch (WMB) for review and approval to proceed with the project. The WMB shall review the proposal to assure that it is in agreement with the system plan and that it has not been prepared by some other SWD district office. The development will also be coordinated with other divisions and HEC.

b. Approval of Programs (Software). After the formal review panel has reviewed the program as described in paragraph 7.8.6.3 a copy shall be submitted to the Chief of SWD Water Management Branch for approval.

c. Distribution. The Chief of SWD WMB will maintain copies of approved programs and their documentation on file for distribution to other sites within the WCDS. These programs will also be available for exchange with other Divisions.

d. Maintenance and Revisions. All requests for changes to existing programs will be submitted to the Chief of SWD WMB. When these are approved the same proceedures and standards as apply to a new program will be applyed to these changes. Approval and distribution of the revised software will be by the Chief of the SWD WMB.

8.2.2 Software or Program Module Management. After a field office (district) development proposal is approved by the Chief of SWD WMB the field office will be responsible for management and review of the module. The district RCC Branch Chief or head of the formal review panel shall assure that it

conforms to the system development standards and guidelines as prescribed in this manual. Formal reviews and submittal for approval shall follow guidelines set forth in Chapter 7 and paragraph 8.2.1

8.3 Schedule.

8.3.1 General. The scheduling presented in this section is shown as priorities for development of the applications software and support software. The development has been divided into 6 priorities. The calendar time required for completion of any one priority and/ entire system will be dependent on availability of resources. The applications software and support software development priorities are shown on Table 8-1. These are also shown graphically on Figures 8-1 through 8-7.

8.3.2 Priority 1.

a. Priority 1 development shown on Figure 8-1 will provide programs in the Acquisition Group (A), Database Utility Group (B), and Database Group (D) which are necessary for entry and basic screening of data from the field gages and observers. This will allow the user to assemble these data into elementary reports and tables. At this level of development, movement and manipulation of the data within the computer will require considerable manual effort (interaction) by the user.

b. The development of new and/or adaptation of existing software for the SWD WCDS as proposed under priority 1 is estimated to cost $268,000. This represents about 56 man-months of effort.

c. In addition to the above cost several man-months of effort will be required for development of the Basin Model Files (C7) and (C9). These files will contain the calibration data for each river basin, watershed, or project where the forecast and operation models are to be applied. The cost of developing these calibration files could range from $25,000 to $50,000 per basin for the streamflow forecast model (C2) and from $10,000 to $20,000 per basin for the operation model. The cost per basin will vary depending on the amount of prior work that has been done on developing hydrographs, routing coefficients, etc. This effort can begin at priority 1 and continue as resources are available. C7 files should be complete when priority 4 is reached and C9 files should be complete when priority 5 is reached.

8.3.3 Priority 2. The priority 2 development shown on Figure 8-2 will provide enhancement of the acquisition and editing of data. The software proposed under priority 2 is estimated to cost $265,000 and represents 55 man-months of effort.

8.3.4 Priority 3. The priority 3 development shown on Figure 8-3 provides for graphical display, enhancement of data analysis and screening, and the streamflow forecast model. The software proposed under priority 3 is estimated to cost $214,000 and represents 45 man-months of effort.

8.3.5 Priority 4. The priority 4 development shown on Figure 8-4 would provide stream flow forecasts, additional reports, gate setting outflow, and improved system operation. This software is estimated to cost $190,000 and represents 39 man-months of effort.

8.3.6 Priority 5. The priority 5 development shown on Figure 8-5 will provide for operations models, economic and extended analysis general archiving and a data network link for transfer of data through the system. This software is estimated to cost $207,000 and represents 43 man-months of effort.

8.3.7 Priority 6. The priority 6 development shown on Figure 8-6 provides for an enhancement of data acquisition by adding programs for collecting satellite and radar imagery data completing analysis and support software. This software is estimated to cost $205,000 and represents 42 man-months of effort.

8.3.8 Support Software. The support software shown on Figure 8-7 should be developed concurrently with the applications software in order to provide "a user friendly system." The proposed priorities for this development are shown on table 8-1. Support software includes:

a. The Database Routines.

b. The Control Routines.

c. The Records Routines.

d. The Communications support.

e. The Training Aids.

TABLE 8-1
SYSTEM DEVELOPMENT COST & PRIORITIES

Group	Program	Capability	Priority/Cost ($1,000) 1	2	3	4	5	6	Description
Applications Programs									
A	1	a		25					GOES- SYNC 4800
		b	12						GOES- ASYNC, Auto-dial
	2	a		15					NWS Communication, S/140 Computer
	3	a	10						Land Line- ASYNC Comm, DARDC
	4	a	40						Manual Data Link
	5	a		60					Inter Computer Data Link
	6	a						50	Satellite Imagery Communication
	7	a						25	Radar Imagery Communication
	8	a	0						Data Conv.&Screen(See A4 for Cost
	9	-		0					Site File
	10	a		20					Site File Utility
	11	a			2				Emergency Alert: Terminal Broadcast
		b					20		Emergency Alert: Auto-dial Broadcast
	12	-		0					Data Entry Log
	13	a						30	Imagery Processor(for A6 & A7)
B	1	a	10						Report Gen: Routine Reports
		b		10					Report Gen: Special(Query)
		c			20	60			Report Gen: Other Reports
	2	-		0					Report Format Macros
	3	a	0						Database Utility: Inventory
		b		30					Database Utility: Random Time & Text
		c			60				Database Utility: TOTAL UTILITY

(Table 8-1 Cont'd)

Group	Program	Capability	Priority/Cost ($1,000) 1	2	3	4	5	6	Description
Applications Programs									
B	4	a	6						Display: Tables
		b		25					Display: Plots
		c			12				Display: Graphical
	5	a	30						Mathpack: Basic
		b		30					Operations-Res Inflow
		c				15			Operations-Gate Setting&Outflow
	6	a					10		Data Network Link
	7	a					2		General Archive
C	1	a			20				Data Analysis-High Lev Screening
	2	a				30			Streamflow Forecast
	3	a					50		Operations Model
	4	a					50		Econ Analysis-damage reduction
		b						25	Econ Analysis-benefits
	5	a						25	Coastal Surge & Tide Models
		b					25		Water Supply & Power Demand Accounting
		c					35		Water Sur Profiles, Water Quality
	6	a				0			Forecast Model Preprocessor (See C3)
	7	-							Basin Model File for Forecast Model
	8	a					0		Operation Model Proprocessor (See C3)
	9	-							Basin Model File for Operation Model
SUBTOTAL			108	215	114	105	192	155	

(Table 8-1 Cont'd)

Group	Program	Capability	Priority/Cost ($1,000) 1	2	3	4	5	6	Description
Support Software									
R	1	a			100				Master Control Program
	2	a				20			Interactive Input Control System
	3	a				25			Interactive Executive Control
	4	a			0				Inter-Computer Job Control
D	1								***Master Database***
B	3	a	20						Database Entry: Mass Entry HEC-DSS
		b	20						Database Entry: Mass Entry NASH-TOTAL
D	5	a	40						Database Library: HEC-DSS
		b	50	50					Database Library: SWD-TOTAL to TOTAL
D	4	a	10						Internal Database Transfer: HEC-DSS to TOTAL
		b	10						: DDS to TOTAL
		c	10						:SWD-TOTAL to TOTAL
L	1	a				15			Program Execution Log Entry
	2	a				15			Program Execution Analysis
	3	a				10			Operation Log-Gate Change Record
	4	a			0				Interactive Session Log
S	1	a						10	Massages - Mail
	2	a					15		Bulletin Boards-Public Information
	3	a						15	Documentation-Word Processing
	4	a					0		Remote Conferencing-Several Terminals
	5	a							Inter-Site Communications (See A5)
	SUBTOTAL		160	50	100	85	15	50	
	SYSTEM TOTAL		$268	$265	$214	$190	$207	$205	
	MAN-MONTHS		56	55	45	39	43	42	May vary with skill level used

8.4 Summary of Resource Requirements. The following tabulation gives a summary of the estimated resource requirements for development of the SWD WCDS:

TABLE 8-2
COST SUMMARY

Priority	$1,000			Equivalent Manpower (Man-months)
	Applications Software	Support Software	Total	
1	108	160	268	56
2	215	50	265	55
3	114	100	214	45
4	105	85	190	39
5	192	15	207	43
6	155	50	205	42
TOTAL	889	460	1,349	280

NOTE. Building master data base (D1) and calibration of basin models (C7 & C9) may require an additional 190 to 210 man-months. These costs have not been included in the above figures.

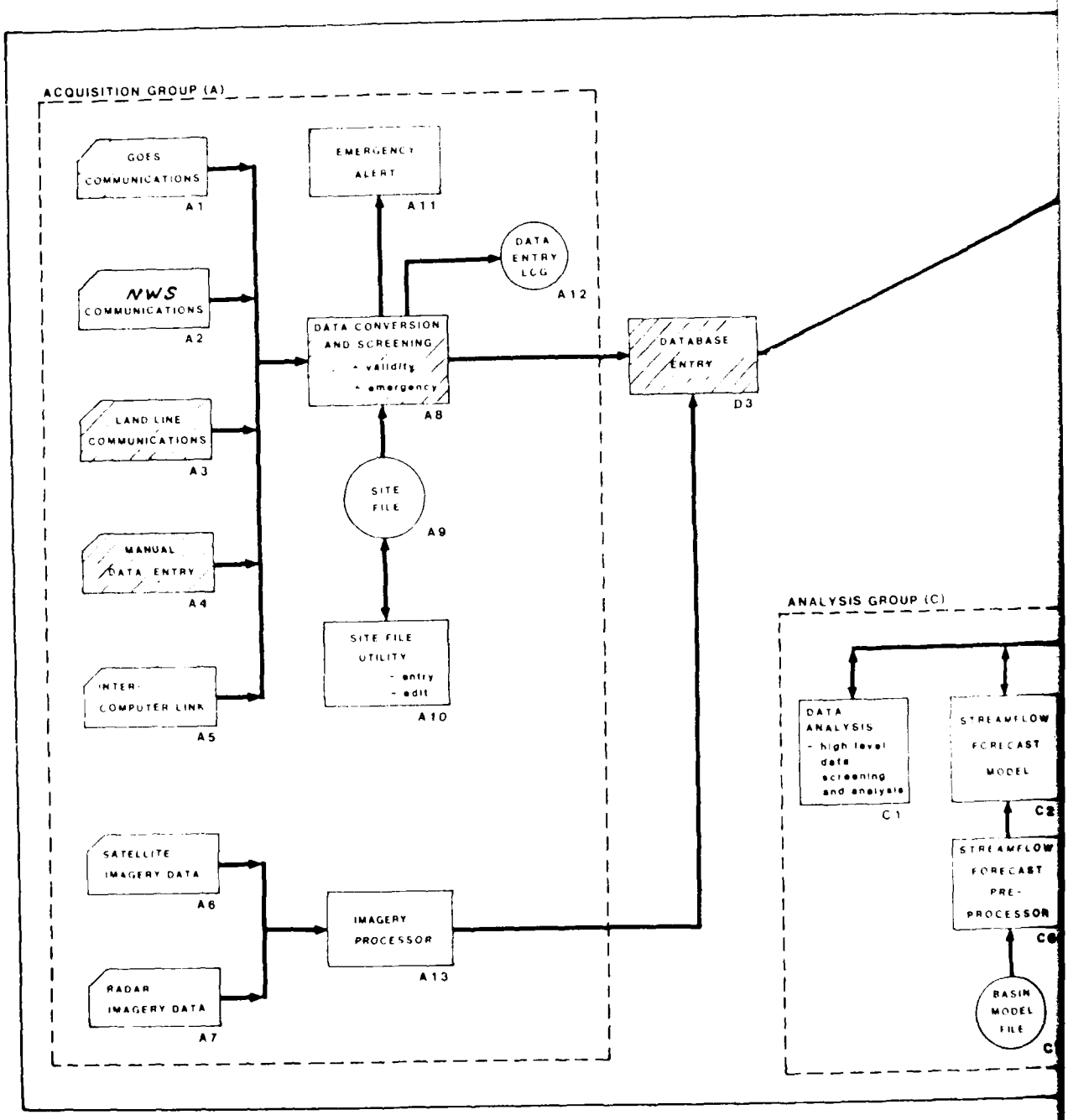
ACQUISITION GROUP (A)
GOES COMMUNICATIONS
A1
NWS COMMUNICATIONS
A2
LAND LINE COMMUNICATIONS
A3
MANUAL DATA ENTRY
A4
INTER-COMPUTER LINK
A5
SATELLITE IMAGERY DATA
A6
RADAR IMAGERY DATA
A7
EMERGENCY ALERT
A11
DATA ENTRY LOG
A12
DATA CONVERSION AND SCREENING
- validity
- emergency
A8
SITE FILE
A9
SITE FILE UTILITY
- entry
- edit
A10
IMAGERY PROCESSOR
A13
DATABASE ENTRY
D3
ANALYSIS GROUP (C)
DATA ANALYSIS
- high level data screening and analysis
C1
STREAMFLOW FORECAST MODEL
C2
STREAMFLOW FORECAST PRE-PROCESSOR
BASIN MODEL FILE

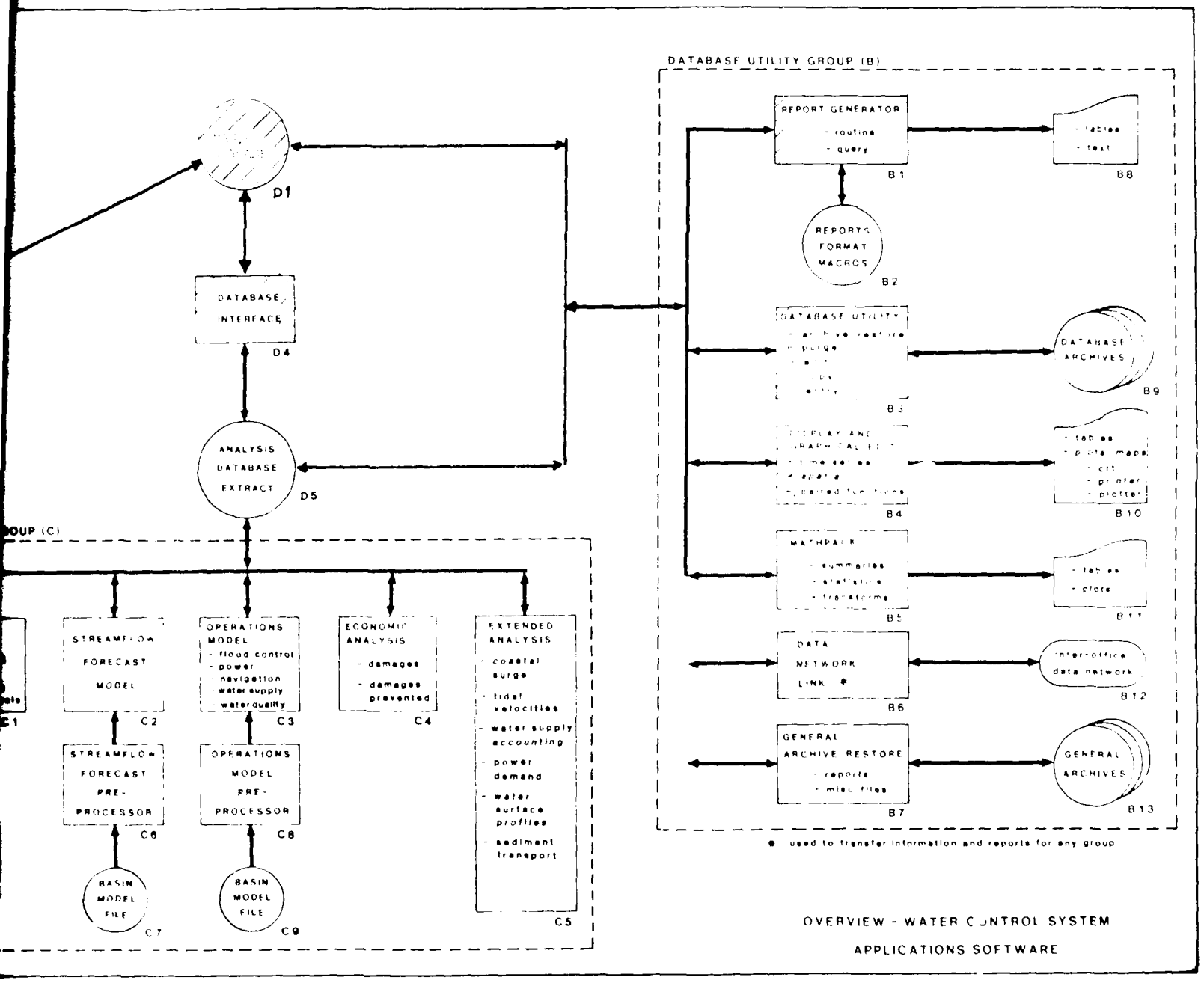
DATABASE UTILITY GROUP (B)
REPORT GENERATOR
- routine
- query
B1
- tables
- text
B8
REPORTS FORMAT MACROS
B2
DATABASE UTILITY
B3
DATABASE ARCHIVES
B9
B4
B10
MATHPACK
- summaries
- statistics
- transforms
B5
- tables
- plots
B11
DATA NETWORK LINK *
B6
inter-office data network
B12
GENERAL ARCHIVE RESTORE
- reports
- misc files
B7
GENERAL ARCHIVES
B13
* used to transfer information and reports for any group
D1
DATABASE INTERFACE
D4
ANALYSIS DATABASE EXTRACT
D5
STREAMFLOW FORECAST MODEL
C2
OPERATIONS MODEL
- flood control
- power
- navigation
- water supply
- water quality
C3
ECONOMIC ANALYSIS
- damages
- damages prevented
C4
EXTENDED ANALYSIS
- coastal surge
- tidal velocities
- water supply accounting
- power demand
- water surface profiles
- sediment transport
C5
STREAMFLOW FORECAST PRE-PROCESSOR
C6
OPERATIONS MODEL PRE-PROCESSOR
C8
BASIN MODEL FILE
C7
BASIN MODEL FILE
C9
OVERVIEW - WATER CONTROL SYSTEM
APPLICATIONS SOFTWARE

FIGURE 8-1

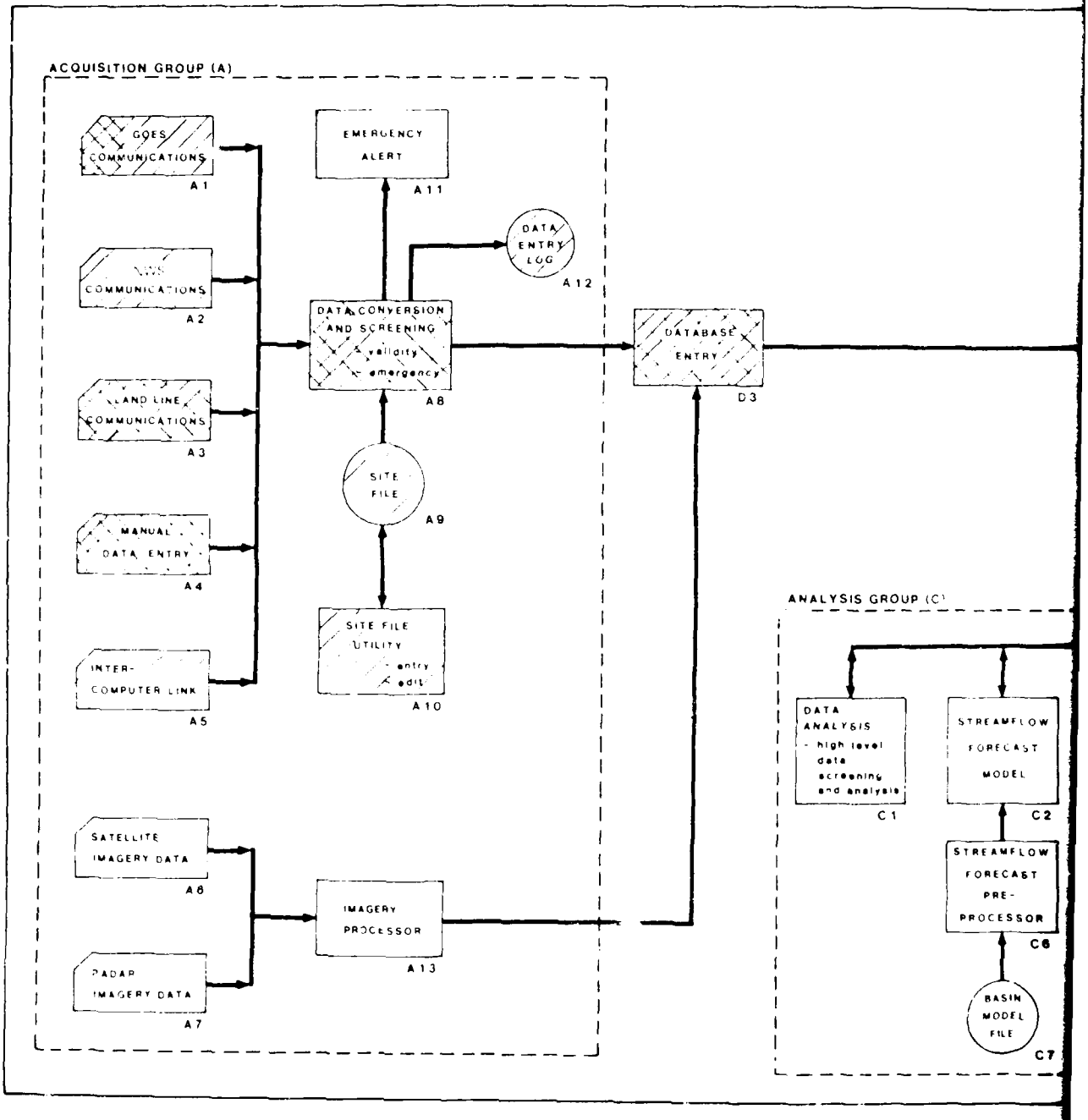
ACQUISITION GROUP (A)
GOES COMMUNICATIONS
A1
NWS COMMUNICATIONS
A2
LAND LINE COMMUNICATIONS
A3
MANUAL DATA ENTRY
A4
INTER-COMPUTER LINK
A5
SATELLITE IMAGERY DATA
A6
RADAR IMAGERY DATA
A7
EMERGENCY ALERT
A11
DATA ENTRY LOG
A12
DATA CONVERSION AND SCREENING
- validity
- emergency
A8
SITE FILE
A9
SITE FILE UTILITY
- entry
- edit
A10
IMAGERY PROCESSOR
A13
DATABASE ENTRY
D3
ANALYSIS GROUP (C)
DATA ANALYSIS
- high level data screening and analysis
C1
STREAMFLOW FORECAST MODEL
C2
STREAMFLOW FORECAST PRE-PROCESSOR
C6
BASIN MODEL FILE
C7

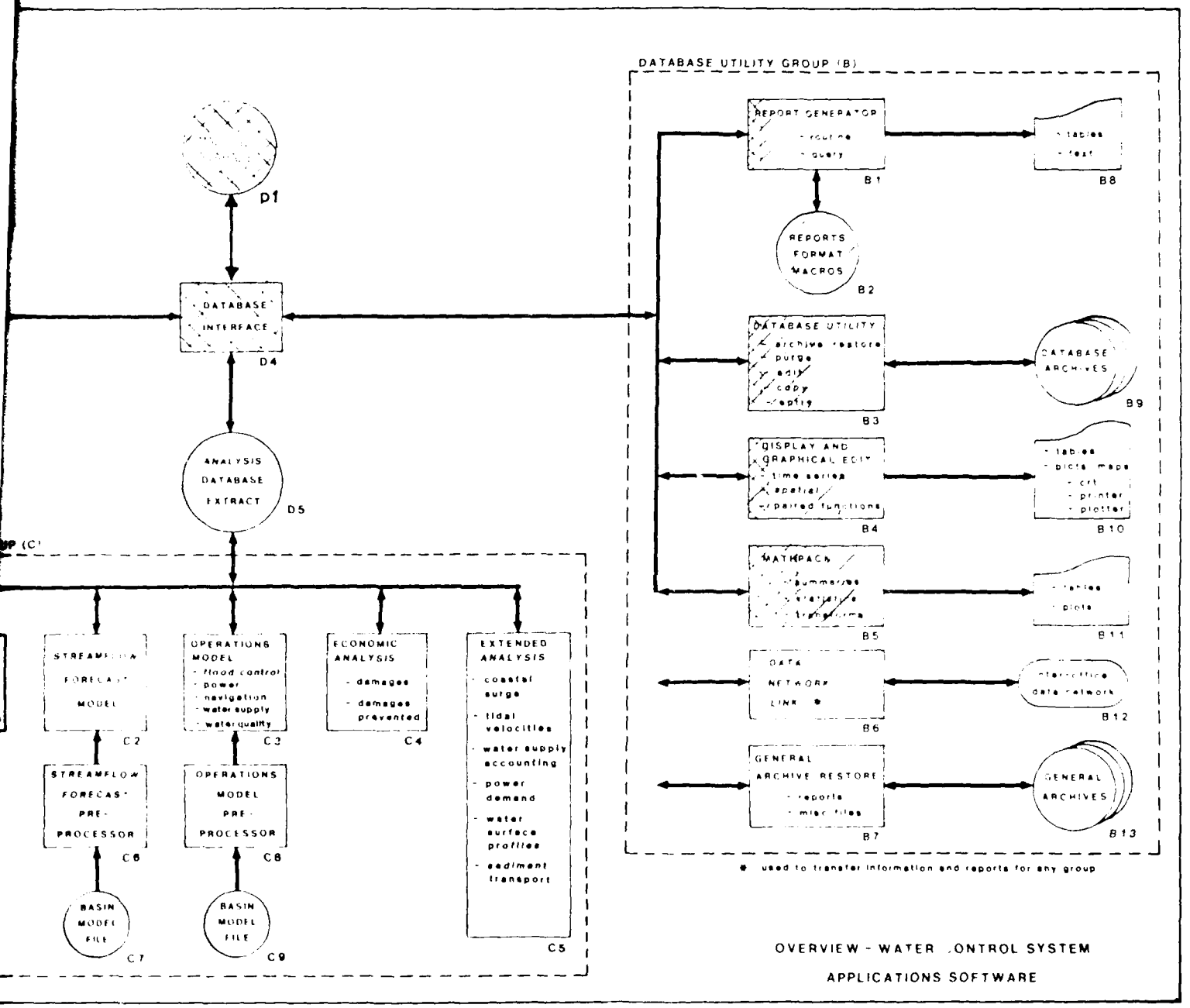

OVERVIEW - WATER CONTROL SYSTEM
APPLICATIONS SOFTWARE

FIGURE 8-2

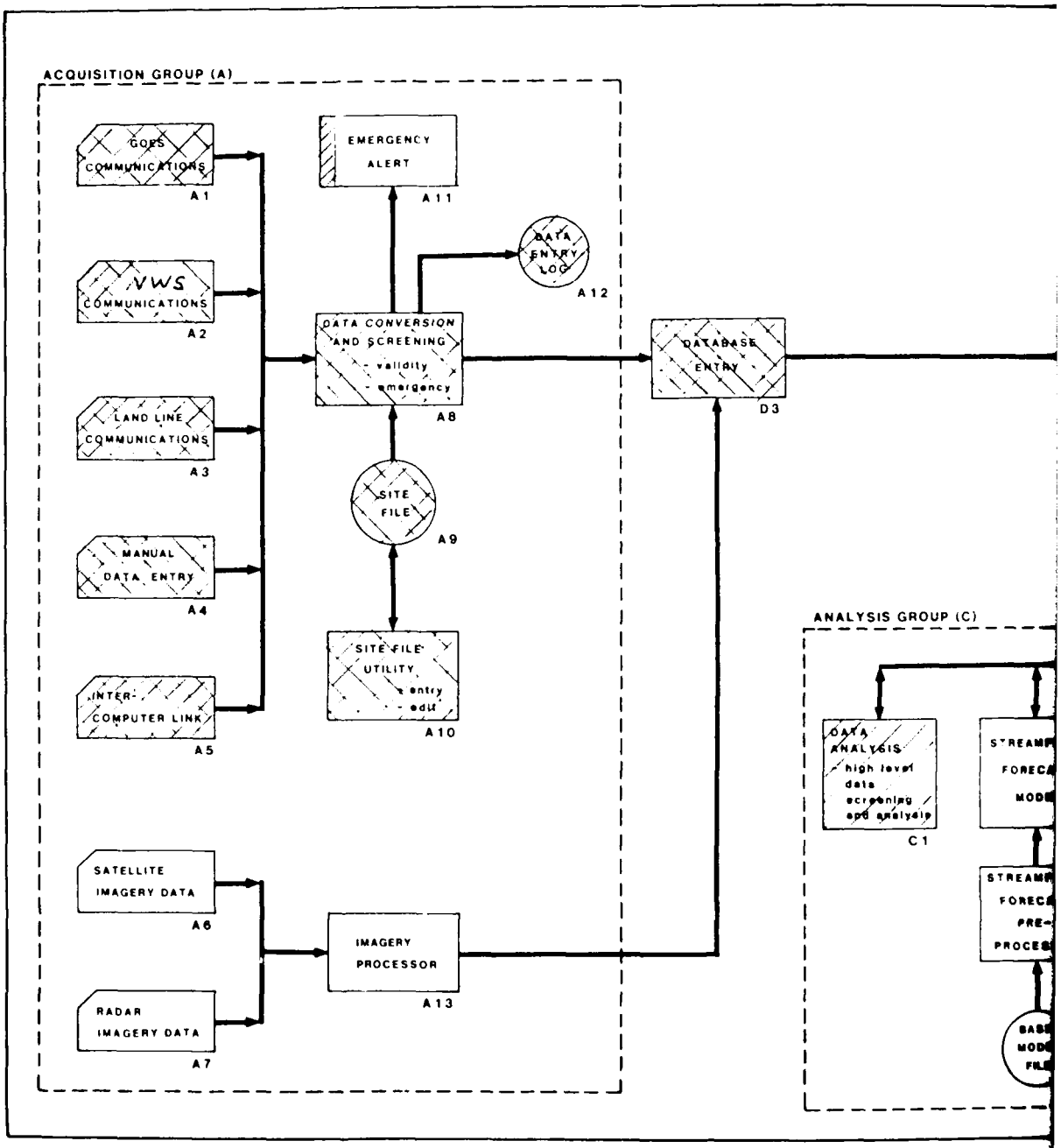
ACQUISITION GROUP (A)
GOES COMMUNICATIONS
A1
NWS COMMUNICATIONS
A2
LAND LINE COMMUNICATIONS
A3
MANUAL DATA ENTRY
A4
INTER-COMPUTER LINK
A5
SATELLITE IMAGERY DATA
A6
RADAR IMAGERY DATA
A7
EMERGENCY ALERT
A11
DATA ENTRY LOG
A12
DATA CONVERSION AND SCREENING
- validity
- emergency
A8
SITE FILE
A9
SITE FILE UTILITY
- entry
- edit
A10
IMAGERY PROCESSOR
A13
DATABASE ENTRY
D3
ANALYSIS GROUP (C)
DATA ANALYSIS
high level data screening and analysis
C1

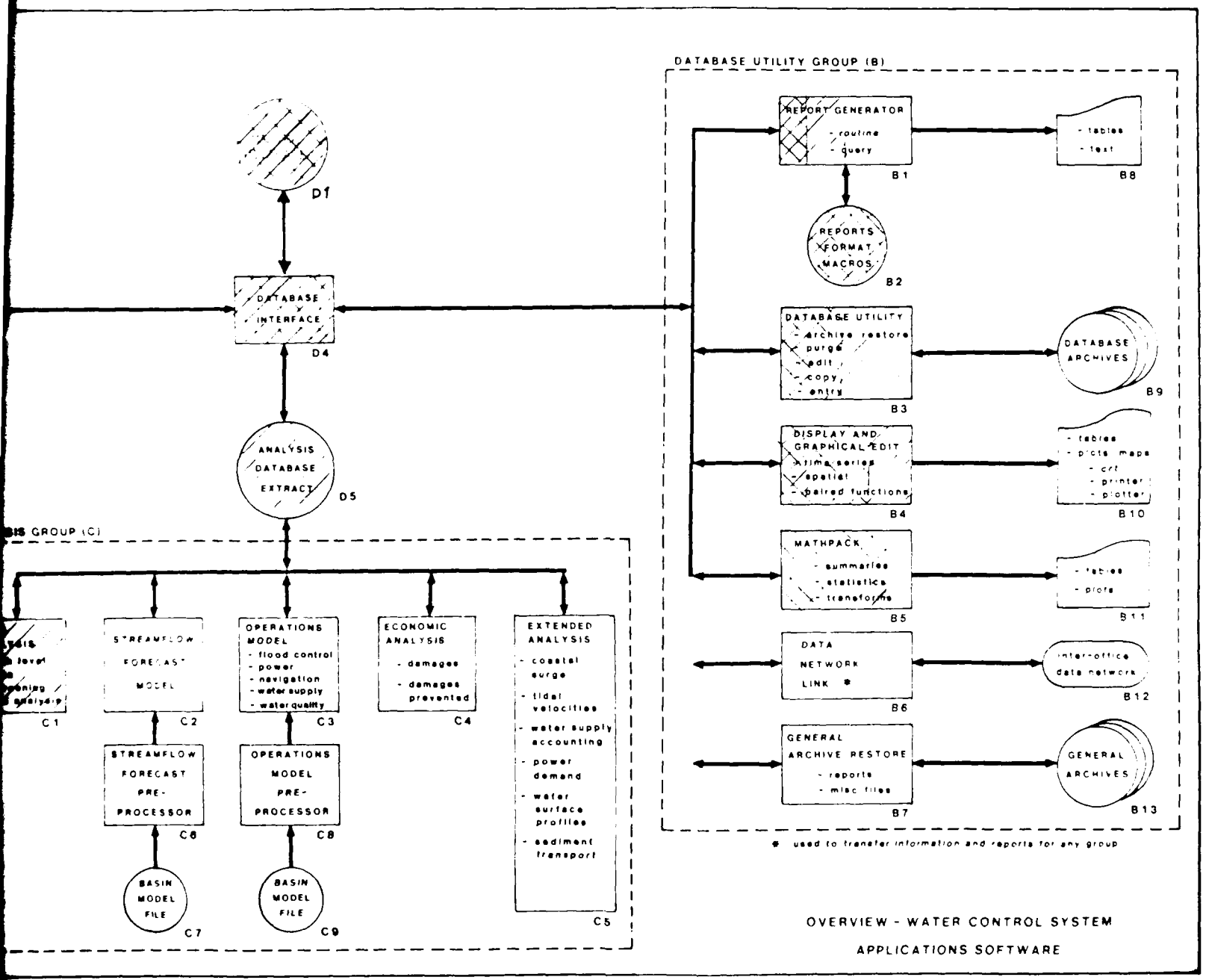

OVERVIEW - WATER CONTROL SYSTEM

APPLICATIONS SOFTWARE

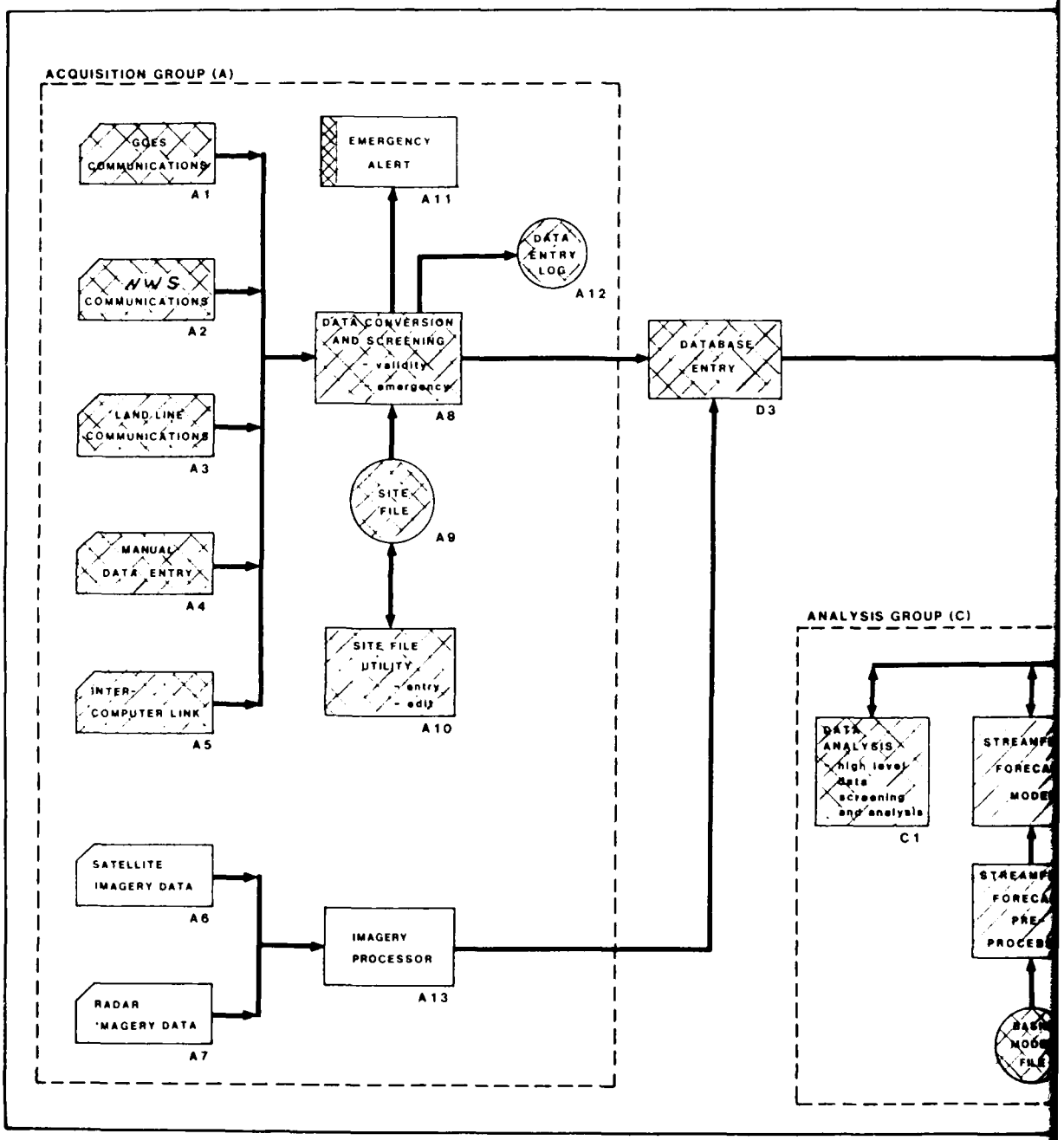

Legend

Develop this priority

Develop previous to this priority

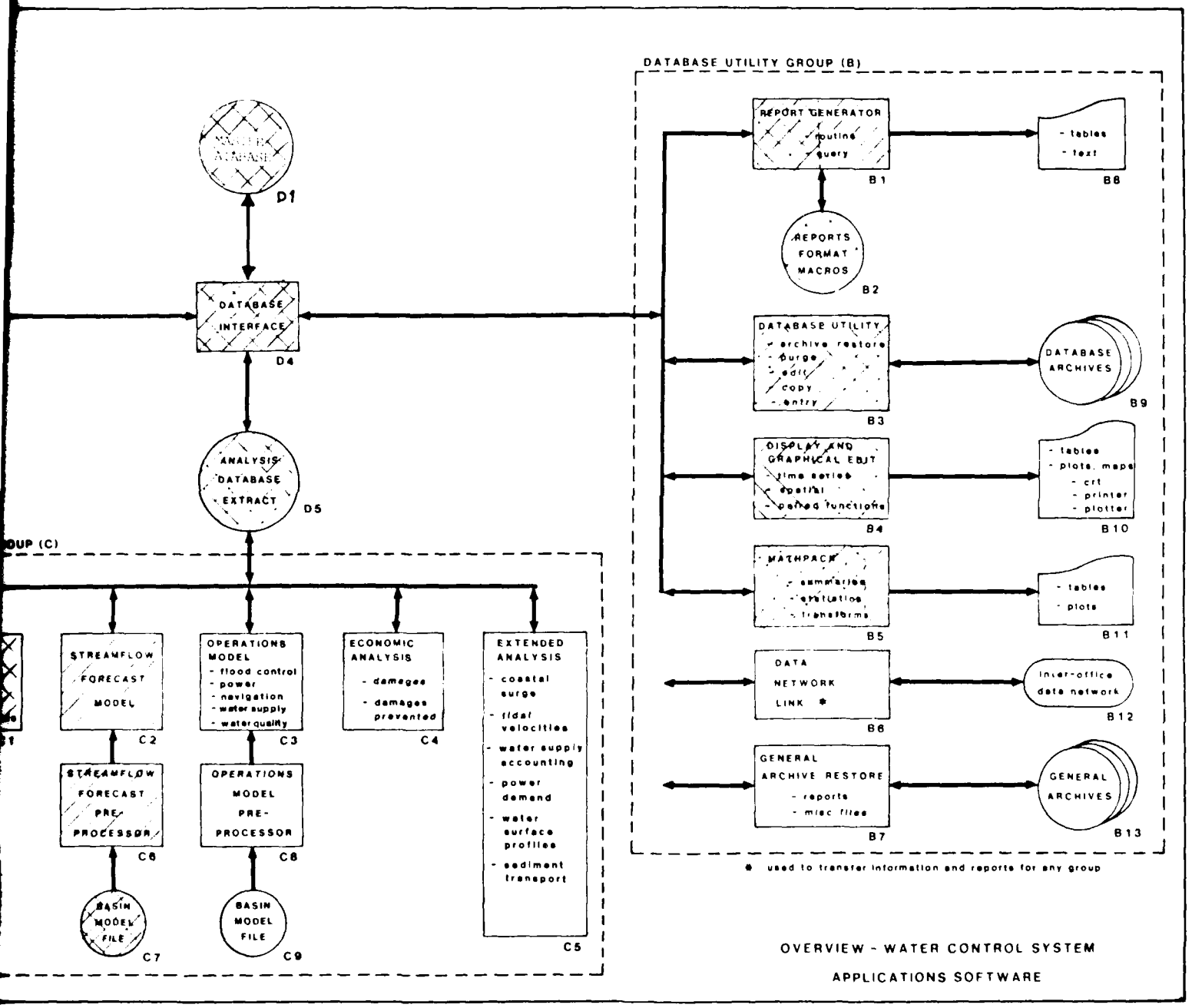
DATABASE UTILITY GROUP (B)
MASTER DATABASE
D1
DATABASE INTERFACE
D4
ANALYSIS DATABASE EXTRACT
D5
REPORT GENERATOR
- routine
- query
B1
- tables
- text
B8
REPORTS FORMAT MACROS
B2
DATABASE UTILITY
- archive restore
- purge
- edit
- copy
- entry
B3
DATABASE ARCHIVES
B9
DISPLAY AND GRAPHICAL EDIT
- time series
- spatial
- paired functions
B4
- tables
- plots, maps
- crt
- printer
- plotter
B10
MATHPACK
- summaries
- correlation
- transforms
B5
- tables
- plots
B11
DATA NETWORK LINK *
B6
inter-office data network
B12
GENERAL ARCHIVE RESTORE
- reports
- misc files
B7
GENERAL ARCHIVES
B13
* used to transfer information and reports for any group
OUP (C)
STREAMFLOW FORECAST MODEL
C2
OPERATIONS MODEL
- flood control
- power
- navigation
- water supply
- water quality
C3
ECONOMIC ANALYSIS
- damages
- damages prevented
C4
EXTENDED ANALYSIS
- coastal surge
- tidal velocities
- water supply accounting
- power demand
- water surface profiles
- sediment transport
C5
STREAMFLOW FORECAST PRE-PROCESSOR
C6
OPERATIONS MODEL PRE-PROCESSOR
C8
BASIN MODEL FILE
C7
BASIN MODEL FILE
C9
OVERVIEW - WATER CONTROL SYSTEM
APPLICATIONS SOFTWARE

FIGURE 8-4

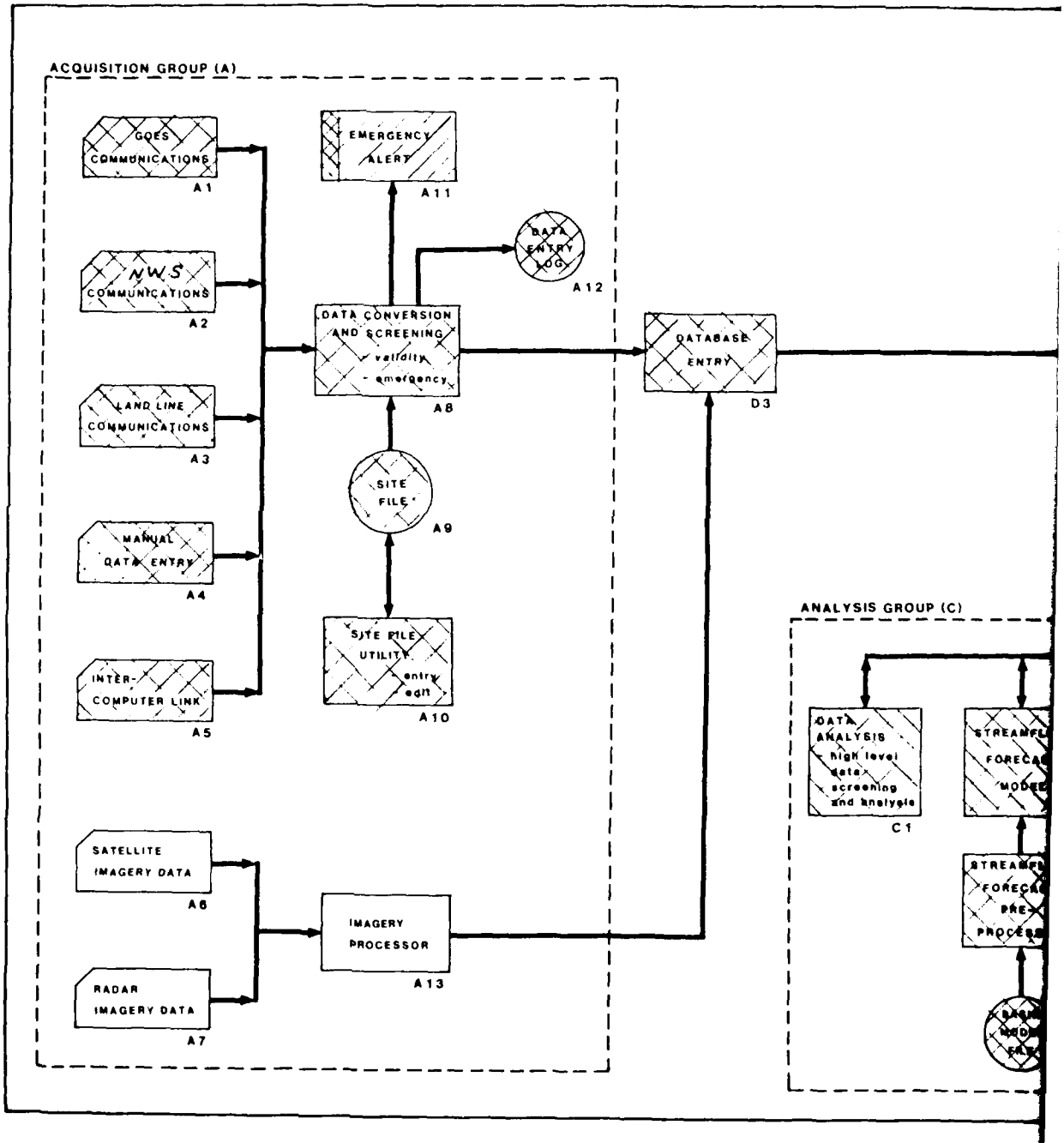

Legend

Develop this priority

Develop previous to this priority

SOFTWARE DEVELOPMENT SCHEDULE
PRIORITY 5

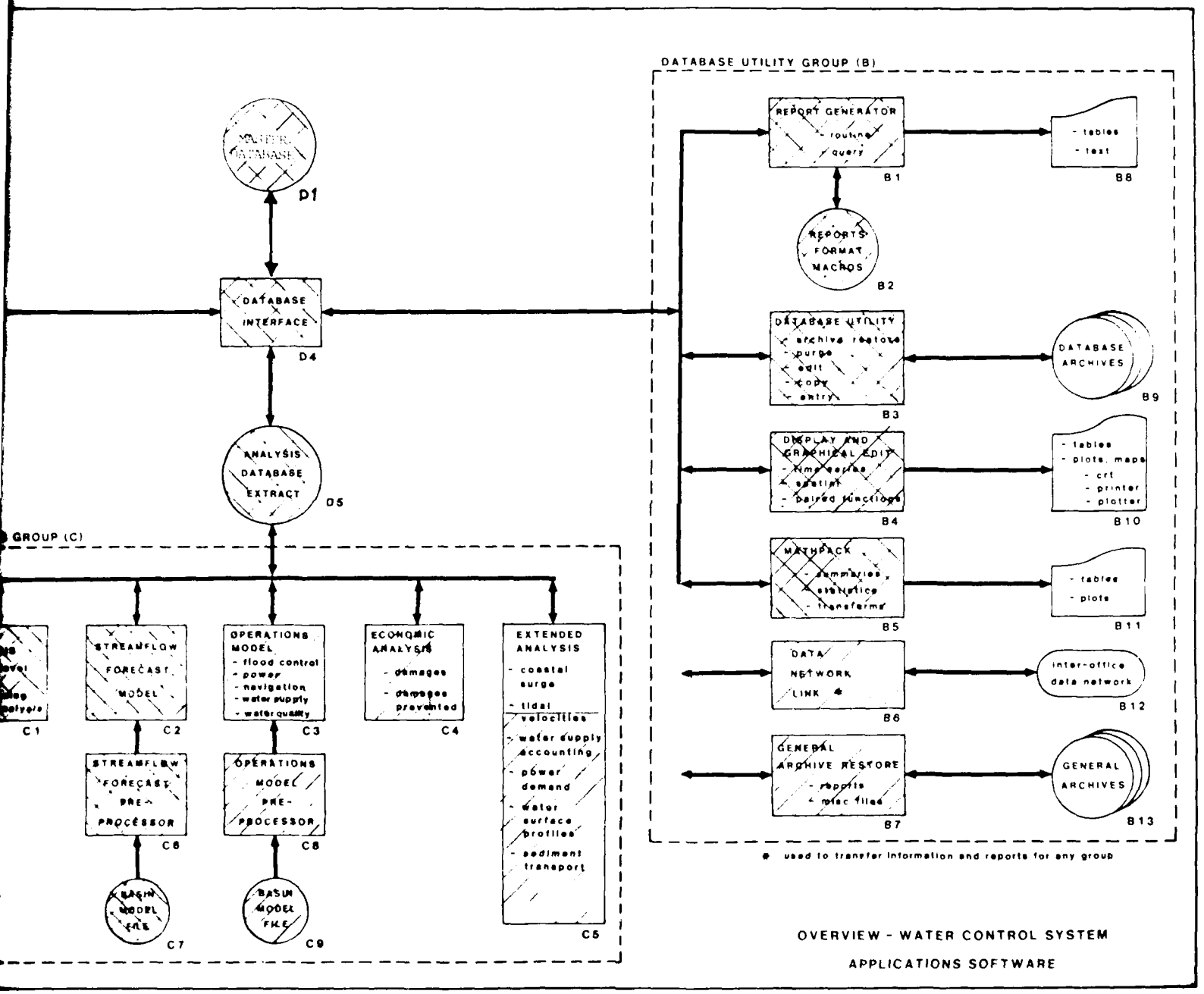

OVERVIEW - WATER CONTROL SYSTEM
APPLICATIONS SOFTWARE

FIGURE 8-5

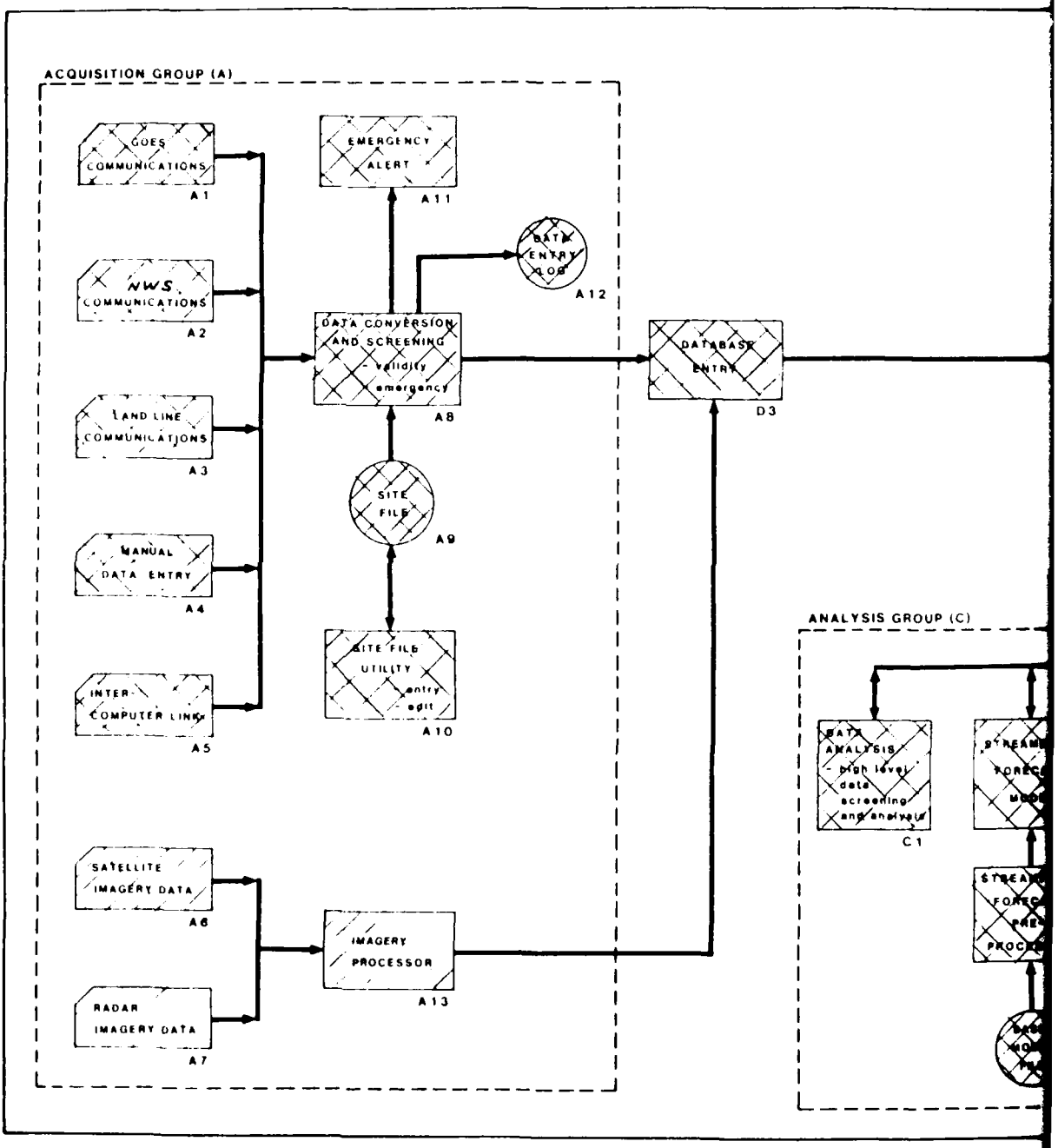

Legend:
Develop this priority
Develop previous to this priority

SOFTWARE DEVELOPMENT SCHEDULE
PRIORITY 6

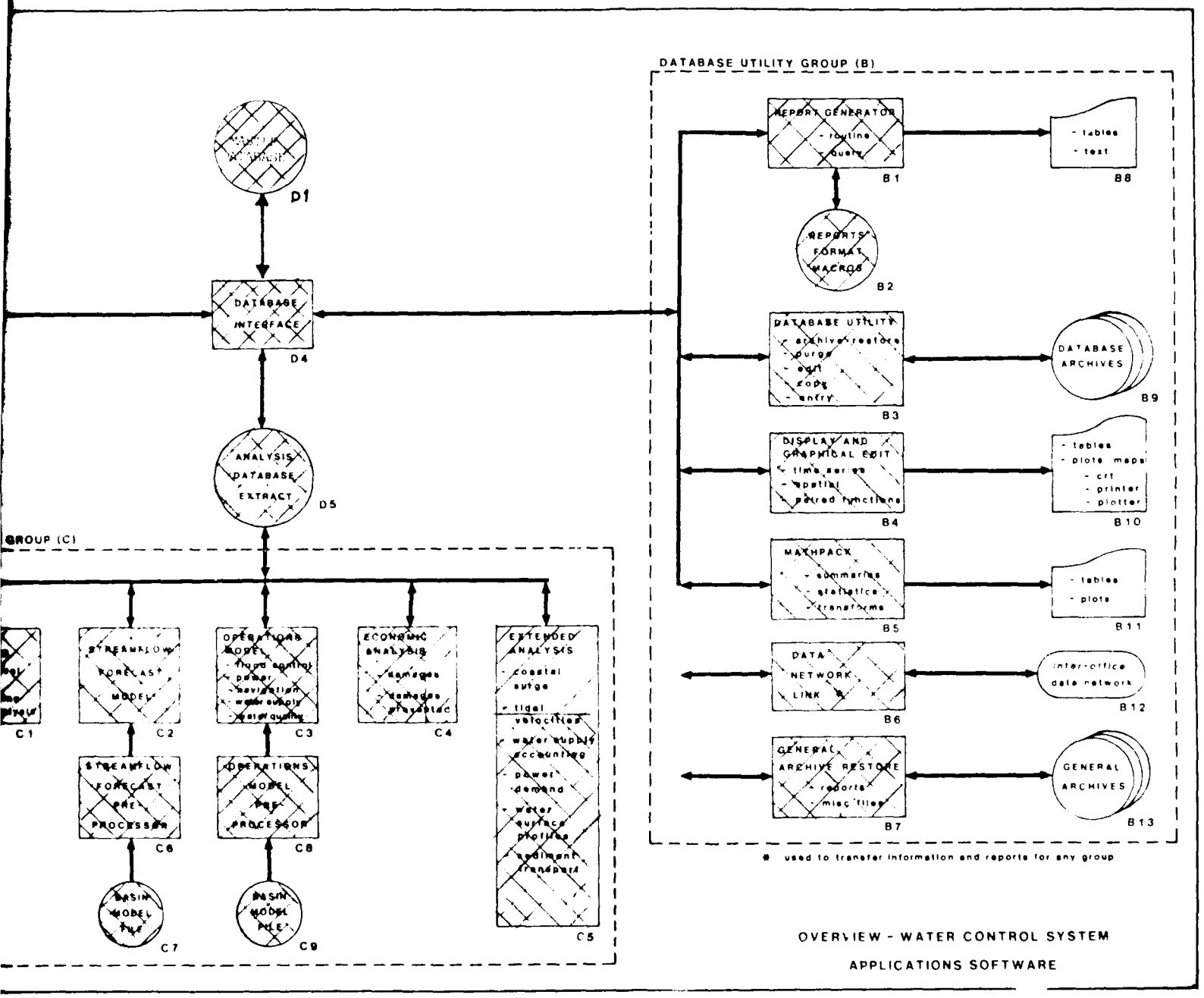

FIGURE 8-6

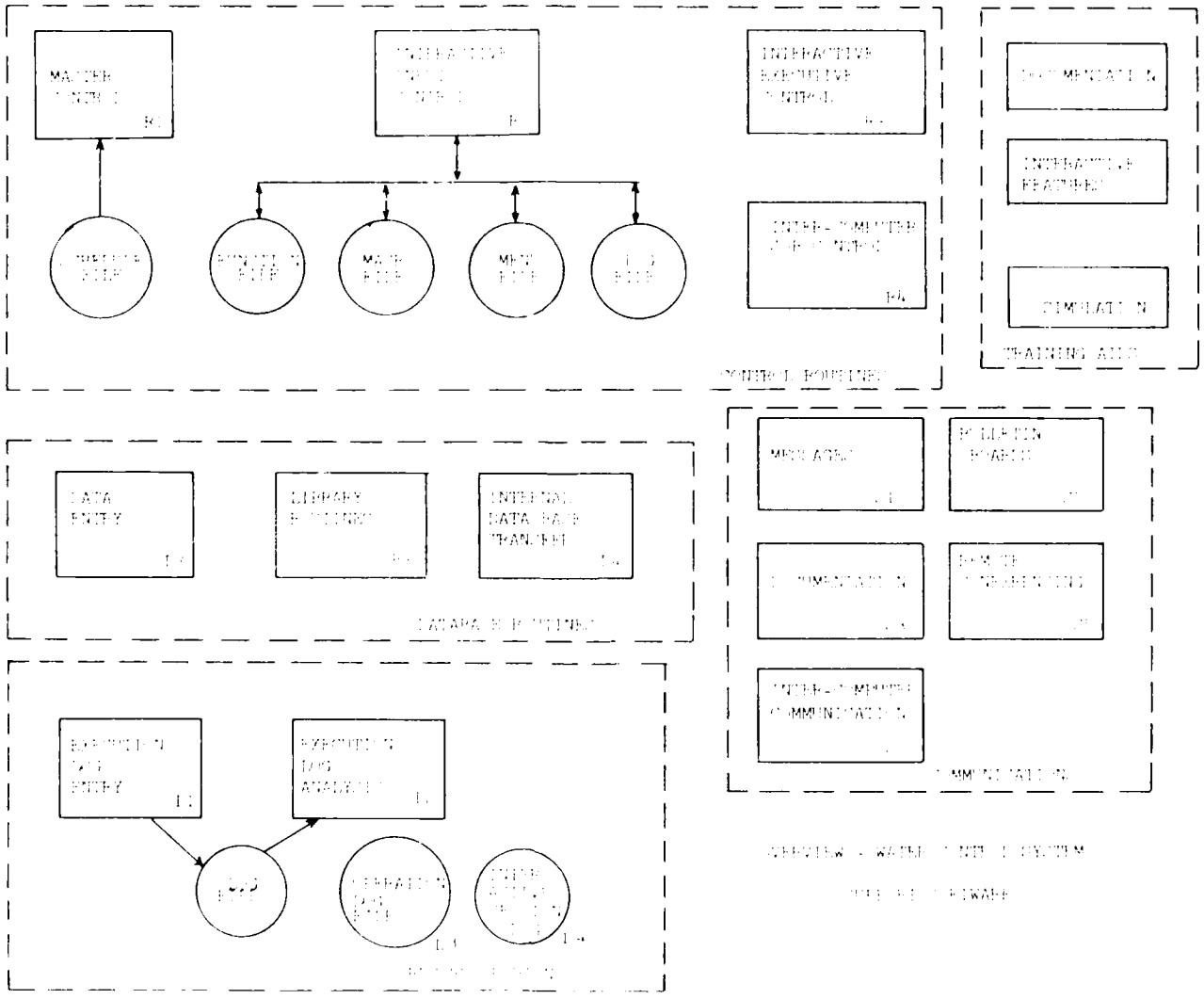

FIGURE 8-2

IX. Glossary.

Applications Program: A routine or set of routines performing a specific function(s) of the user's entire job.

Asynchronous: Events which possess no common time relationship; i.e., they occur independently.

Batch Processing: The technique of executing a set of computer programs such that each is completed before the next program of the set is started.

Bottom-up programing: Programing activities which start at the specific or detailed level of a system and work toward the more abstrac , functional level of a system.

CALL: The command which executes a procedure.

Checkpoint: A point at which information about the status of a job can be recorded.

Data Base: Sequential, hierarchial, or network organization of data fundamental to an enterprise. May be more than one related data set (file).

Data base Management System: The entire set of procedures and programs designed to control a data pool which is created to provide centralization, reliability and ease of accessibility and maintainability of data. Ultimately, the purpose of providing a data base management system is to increase throughput and shorten turn-around times of the associated computer system.

Data Element: An identifiable, accessible data item or group of data items (e.g. a customer's complete address). Data items which are collectively identified as data elements are accessed collectively and cannot be access individually.

Data File: An organized, identifiable, accessible group of data records.

Data Item: The smallest identifiable and/or accessible data entity.

Data Record: An organized, identifiable, accessible group of data items and/or data elements.

Data Set: Any logical input/output entity such as a terminal, terminal message, data file, record or byte string. A major unit of data storage and retrieval, consisting of a collection of data in one of several pre-described arrangements. Used interchangeably with file or data file.

Data Structured Systems Development: A practical, proven approach to software development that covers planning, requirements definitions, system/data base design, programing and project management. A total system life cycle approach to software development based on data structure.

Environment: All of the relevant factors which affect the operations of a program or system. Some areas normally considered a part of the environment are the operating systems, CPU, channel and device configurations, teleprocessing network, and other programs or tasks operating within the same processing unit.

Heuristic: Trial and error.

Implementation: Those stages of program development including coding, testing and system integration.

Interactive: Programs requiring user interaction during execution.

Job Control Language: A set of controls used to direct the execution of computer programs.

Link: (1) A logical interconnection between files.
(2) Object programs to be incorporated to form a load module.

Linkage Path: A path or direction which must be followed in order to access one or more specific records in a variable record chain.

Load Module: A module in a format suitables for loading into main storage by the control program.

Logical Read: The acquisition of a data record from an input/output buffer.

Logical Record: A subset of a physical record.

Logical Write: The transfer of data from working storage to an input/output buffer.

Module: A set of computer instructions which perform a limited function. Normally does not stand alone. Used interchangeably with routine.

Multi-processing: Pertains to the simultaneous execution of two or more computer programs or sequences of instructions by a computer. A computer system employing two or more interconnected processing units to execute programs simultaneously.

Multi-programing: Pertains to the concurrent execution of two or more program by a computer. A computer system which can process two or more programs concurrently by interlacing their execution.

Multi-tasking: Concurrent execution of more than one task. The tasks may either multi-thread through a single program or single-thread through multiple programs or a combination of both.

Multi-thread: Pertains to the concurrent execution of a re-entrant program by more than on task. Each task may take different threads through the same program.

Object Program: A machine language program which is the output after translation from the source program.

Operating System: Software which controls the execution of computer programs and which may provide scheduling, debugging, input/output control, accounting, compilation, storage assignment, data management, and related services.

Physical Read: The physical transfer of a block of data from an external storage to an input/output buffer.

Physical Record: A physical block of data containing one or more logical records.

Physical Write: The physical transfer of a block of data from an input/output buffer to external storages.

Procedures: One or more commands, identified as a file, which can be executed by a call command.

Program Coding: The production of computer instructions from design charts.

Program Debugging: Detection and correction of errors prior to release.

Program Design: Those programing activities which start with the user's requirements and end with design charts of individual program processes and data structures.

Program Maintenance: Programing which corrects deficiencies or errors (bugs) in computer programs.

Program Testing: Utilizing sample data to demonstrate the accuracy and completeness of programs.

Program Update: Programing to add new functions not previously available.

Queue: A waiting line or list formed by items in a system awaiting service.

AD-A134 359 WATER CONTROL DATA SYSTEM SOFTWARE MANUAL(U) CORPS OF ENGINEERS DALLAS TX SOUTHWESTERN DIV FEB 83 3/3

UNCLASSIFIED F/G 13/2 NL

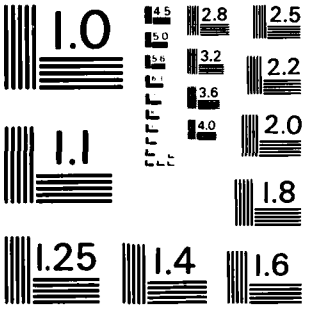

MICROCOPY RESOLUTION TEST CHART
NATIONAL BUREAU OF STANDARDS - 1963 - A

Random Processing: The treatment of data without respect to its location in external storage, and in arbitary sequence governed by the input against which it is to be processed.

Real Time: (1) Executed according to clock or calendar time.
(2) Actions which affect a positive influence on the environment.

Routines: See module.

Source Program: A series of statements in the symbolic language of the assembler that is input to the translation process.

Structured Programing: A set of rules for programing which restrict program development and maintenance to a few techniques which result in a well-ordered, easily readable, and verifiable and maintainable program.

Subroutine: A subprogram which cannot stand alone, it must be called by a program.

Synchronous: Occuring at a pre-established rate or running off the same clock.

System: (1) General Definition: An ordered set of elements organized toward the achievement of a common goal or set of goals.

(2) Program Context Definition: A group of applications programs which cooperate in the production of a single product or a set of products.

System Integration: The combining of two or more programs into the operational system.

Throughput: Total volume of work performed by a computing system over a given period of time.

Time-sharing: Sharing of CPU among more than one user to produce the appearance that each user has sole use of the computer system.

Top-down Programing: Programing activities which start with the most abstract or general function of a system and work toward the more specific functions and activities of a system.

Variable: A numeric or character value which changes as dictated by the related program.

Version: A program which performs a part of the total function required of the complete program.

Warnier/Orr diagrams: A means of definition, design and documentation of logically and physically structured systems.